

Datasheet

Electromagnetic Flowmeter

LGD-SUP-A100

Supmea

Committed to process automation solutions

E-mail: info@supmea.com

www.supmea.com

Datasheet

Electromagnetic flow meter
LGD-SUP-A100

The electromagnetic flow meter is designed based on the Faraday electromagnetic induction principle and are used to directly measure the flow rate of conductive liquids in closed pipelines. During on-site monitoring and display, standard current signals, pulse signals, and RS485 digital signals can be output for recording, adjustment, and control, achieving automatic detection and control. It can be widely used in industries such as tap water, chemical industry, coal, environmental protection, light textile, metallurgy, paper making, etc.

Applications

- Tap water
- Chemical industry
- Coal
- Environmental protection
- Light textile
- Reservoirs



Electromagnetic flowmeter

Features

- 0.5%F.S measuring accuracy
- RS-485 modbus communication, 4-20mA output
- It can measure the flow of fluid in the forward and reverse directions.
- Unaffected by the temperature, pressure, density of the liquid.
- There is no pressure loss.
- Readings that are unaffected by changes in density or viscosity.
- The grounding screws are available by default

Principle

The operating principle of electromagnetic flowmeter is based on Faraday's law of electromagnetic induction. The two electromagnetic coils at the upper and lower ends as shown in Figure 3 generate a constant or alternating magnetic field. When the conductive medium flows through the electromagnetic flowmeter, the induced electromotive force can be detected between the left and right electrodes on the wall of the flowmeter tube. The magnitude of the induced electromotive force is proportional to the electrically conductive medium flow rate, the magnetic induction density of the magnetic field, and the width of the conductor (the inner diameter of the flowmeter measuring tube), and the flow rate of the medium can be obtained by calculation. The induced electromotive force equation is as follows:

$$E=K\times B\times V\times D$$

Where: E—Induced electromotive force K—
Meter constant
B—Magnetic induction density
V—Average flow speed in cross-section of measuring tube D—
Inner diameter of measuring tube

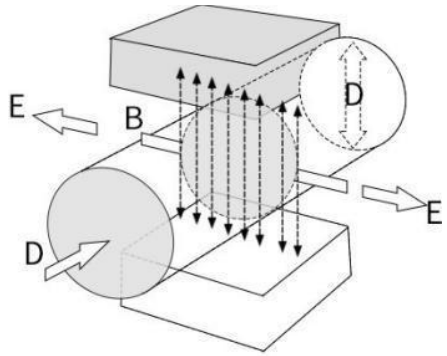

Fig.1

When measuring the flow, the fluid flows through a magnetic field which is perpendicular to the flow direction. The flow of conductive fluid induces a potential proportional to the average flow velocity, thus requiring the conductivity of the measured flowing liquid to be higher than the minimum conductivity.The induced voltage signal is detected by two electrodes and transmitted to the converter via a cable. After a series of analog and digital signal processing, the accumulated flow and real-time flow are displayed on the display of the converter

Parameters			
Measured variable	Direct measured variables ： Flow velocity Calculated measured variables ： Volume flow , mass flow.		
Velocity of flow	Typically Velocity of flow：0.5m/s~5m/s		
Nominal diameter	DN10~DN1000		
Flow range	Nominal diameter	Min value	Max value
	DN10	0.14	1.4
	DN15	0.32	3.2
	DN20	0.56	5.6
	DN25	0.88	8.8
	DN32	1.4	14
	DN40	2.3	23
	DN50	3.5	35
	DN65	6	60
	DN80	9	90
	DN100	14	140
	DN125	22	220
	DN150	32	320
	DN200	56	560
	DN250	88	880
	DN300	127	1270
	DN350	173	1730
	DN400	226	2260
	DN450	286	2860
	DN500	353	3530
	DN600	509	5090
	DN700	693	6930
	DN800	905	9050
	DN900	1150	11500
	DN1000	1410	14100
Range ratio	1:10		

Output			
Current output	Function	Measurement of volume and quality (in the case of constant density)	
	Setting	Scope	(4~20)mA
		Max	20mA
		Min	4mA
	Internal voltage	24VDC	

Pulse output	Loading	≤750Ω	
	Function	Set up Pulse output	
	Pulse output	Basis	Fmax ≤ 5000 cp/s Output pulse width: 0.1ms ~2000ms (This value is lower than the maximum duty cycle, with a maximum duty cycle of 1:1
		Pulse coefficient	0.001~100000/unit
	Passive	U_{Outer}≤ 30VDC	
	Active	$U_{Internal}$ ≤ 24VDC	
		I≤ 4.52mA	
Communications	RS485;MODBUS-RTU;Hartcommunication(optional)		
Relay (Remote type optional)	2 channels SPST, 250VAC，3A		

Power supply	
Supply voltage	100VAC~240VAC，50/60Hz； 20VDC~28VDC
Power consumption	≤15W
Terminals	Screw type terminal block, maximum wire diameter 2.5mm²
Cable entries	M20*1.5 Cable gland
Signal cable	Apply only to remote type

Performance characteristics	
Reference operating conditions	Medium: water Temperature: 20℃ Pressure: 0.1MPa Stallation requirements: Inlet run≥10DN, Outlet run≥5DN
Accuracy	Measurement value±0.5%(Flow velocity 0.5m/s~5m/s)
Repetitiveness	0.16%
Maximum measured error	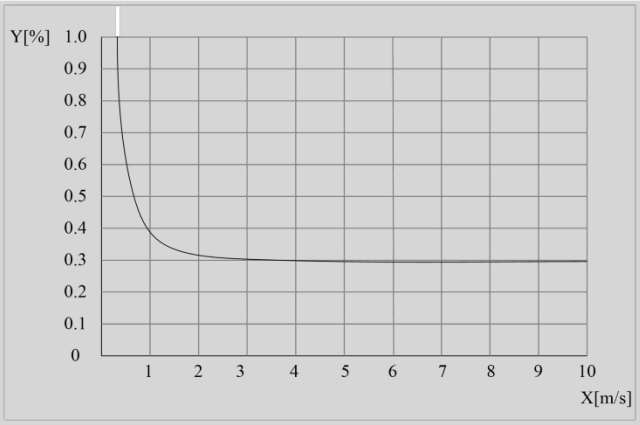 ①X[m/s]：Velocity of flow

	②Y[%]：Actual measured value deviation	
	Process	
Medium temperature range	Chloroprene rubber (CR)：-10℃~70℃ Polyurethane rubber (UR)：-10℃~60℃ PTFE/FEP：-10℃~120℃ PFA：-10℃~120℃	
Pressure rating (High pressure can be customized)	DN10~DN250：PN<1.6MPa DN300~DN1000：PN<1.0MPa Note：(If there are differences in the selection of individual specifications, the label shall prevail, and high-voltage can be customized)	
Conductivity	≥50μS/cm	
Buried depth	Not deeper than 5 meters (only for remote type sensors with IP68 protection)	
Immersion depth	Not deeper than 5 meters (only for remote type sensors with IP68 protection)	
	Environment	
Ambient temperature	Integrated type: -10℃~55℃ Remote type: Converter:-20℃~55℃ Sensor: -10℃~55℃	
Storage temperature	-20℃~55℃	
Ingress protection	Integrated type	IP65
		IP66/IP67 （Cable requirements: Choose armored shielded cable, core: diagonal 2 * 2 * 0.75 or 1.5 * 2/2.5 * 2；wire diameter 8mm~12mm）
	Remote type	Sensor：IP65 Converter：IP68

Wiring

Wiring terminals

Integrated type

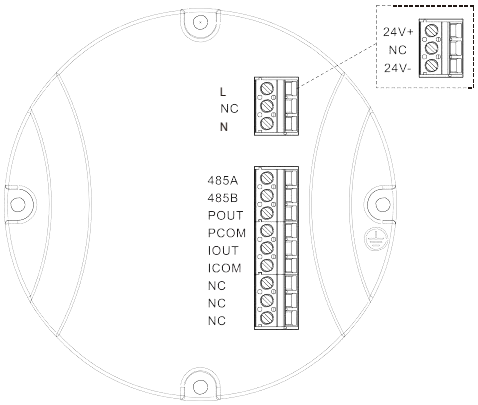

Terminal schematic diagram

Table 1 Terminal Description

Terminal	Description
L,N	220V AC power supply
24V+, 24V-	24V DC power supply
485A, 485B	RS485 serial communication
IOUT, ICOM	(4~20)mA output
NC	Not Defined
ON/OFF	DIP switch for pulse output type. ON indicates active output; OFF indicates passive output.
POUT, PCOM	Pulse output
⏚	Converter instrument protection grounding

Remote type

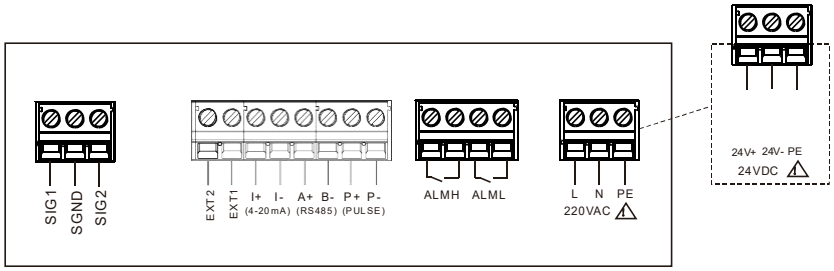

Fig.2 Terminal schematic diagram

Table 2 Terminal Description

Terminal	Description
SIG1; SIG2; SGND	Sensor signal
EXT1; EXT2	Excitation signal
I+; I-	(4~20)mA output
A+; B-	RS485 serial communication
P+; P-	Pulse output
ON/OFF	DIP switch for pulse output type. ON indicates active output; OFF indicates passive output.
ALMH; ALML	Relay output (Optional)
L; N	220V AC
24V+; 24V-	24V DC
PE	Ground

Installation

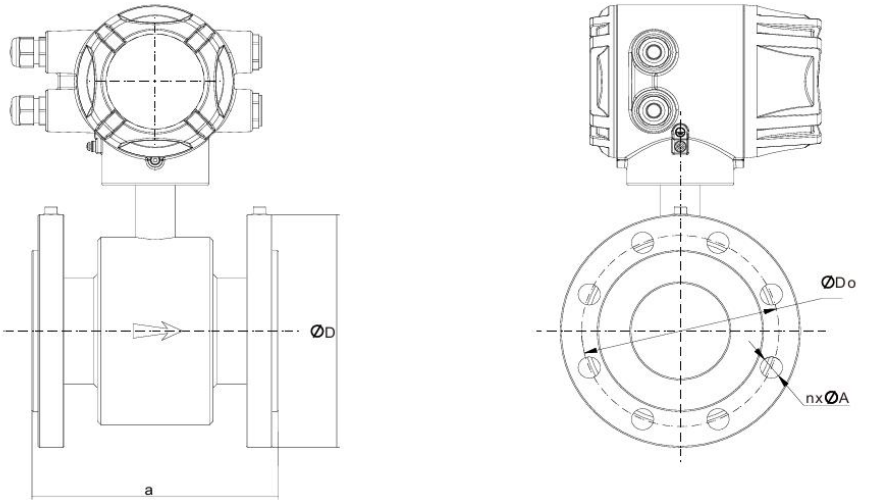

Structural diagram of the integrated sensor

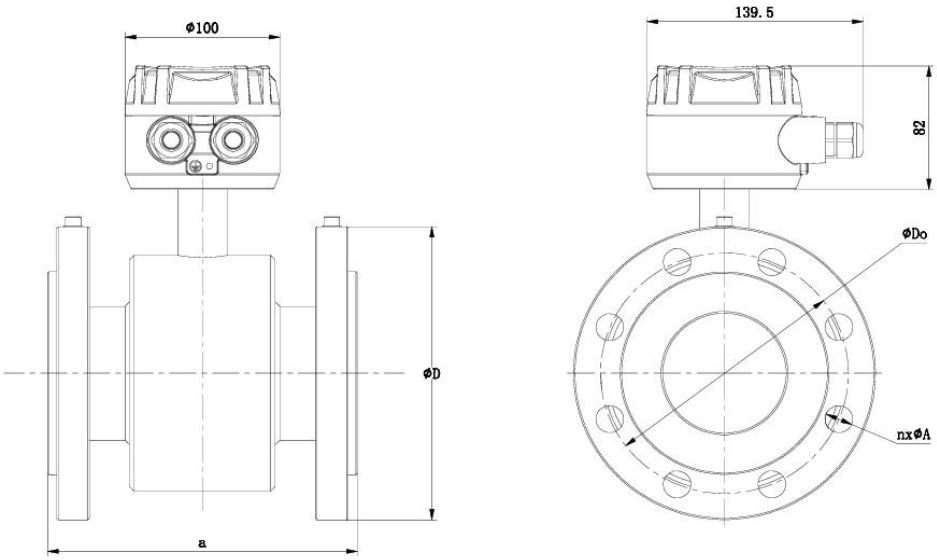

Structural diagram of the remote sensor

Sensor dimensions (JB/T81 Flange Connection)

Installation

Unit in mm

DN	a	D	Do	n*A	Pressure resistance
10	200	90	60	4*14	1.6MPa
15	200	95	65	4*14	1.6MPa
20	200	105	75	4*14	1.6MPa
25	200	115	85	4*14	1.6MPa
32	200	135	100	4*18	1.6MPa
40	200	145	110	4*18	1.6MPa
50	200	160	125	4*18	1.6MPa
65	200	180	145	4*18	1.6MPa
80	200	195	160	8*18	1.6MPa
100	250	215	180	8*18	1.6MPa
125	250	245	210	8*18	1.6MPa
150	300	280	240	8*23	1.6MPa
200	350	335	295	12*23	1.6MPa
250	450	405	355	12*25	1.6MPa
300	500	440	400	12*23	1.0MPa
350	550	500	460	16*23	1.0MPa
400	600	565	515	16*25	1.0MPa
450	600	615	565	20*25	1.0MPa
500	600	670	620	20*25	1.0MPa
600	600	780	725	20*30	1.0MPa
700	700	895	840	24*30	1.0MPa
800	800	1015	950	24*33	1.0MPa
900	900	1115	1050	28*33	1.0MPa
1000	1000	1230	1160	28*36	1.0MPa

Installation

Sensor dimensions(GB/T9124 Flange Connection)

Unit in mm

DN	a	D	Do	n*A	Pressure resistance
10	200	90	60	4*14	1.6MPa
15	200	95	65	4*14	1.6MPa
20	200	105	75	4*16	1.6MPa
25	200	115	85	4*16	1.6MPa
32	200	140	100	4*18	1.6MPa
40	200	150	110	4*18	1.6MPa
50	200	165	125	4*20	1.6MPa
65	200	185	145	8*20	1.6MPa
80	200	200	160	8*20	1.6MPa
100	250	220	180	8*22	1.6MPa
125	250	250	210	8*22	1.6MPa
150	300	285	240	8*24	1.6MPa
200	350	340	295	12*26	1.6MPa
250	450	405	355	12*29	1.6MPa
300	500	445	400	12*26	1.0MPa
350	550	505	460	16*30	1.0MPa
400	600	565	515	16*32	1.0MPa
450	600	615	565	20*36	1.0MPa
500	600	670	620	20*38	1.0MPa
600	600	780	725	20*42	1.0MPa
700	700	895	840	24*50	1.0MPa
800	800	1015	950	24*56	1.0MPa
900	900	1115	1050	28*62	1.0MPa
1000	1000	1230	1160	28*70	1.0MPa

Installation

■ Installation

(1) Installation direction
The flow direction of the measured fluid shall be consistent with flow direction mark indicated on the flowmeter.

(2) Seal gaskets installed between flanges shall have good corrosion resistance and shall not protrude into the interior of the pipe.

(3) When welding or flame cutting is performed adjacent to sensor pipe, isolation measures shall be taken to prevent the lining from being deformed due to heat.
(4) If it is installed in a well or immersed in water, apply sealant on the terminal box of the sensor after the system is installed and debugged. (If the protection level of the electromagnetic flowmeter is IP68 at type selection, it has been subject to water-proof sealing.)

(5) When the flowmeter is installed on the field, use bolts to connect the flange on the sensor to that on the pipe. Bolts, nuts and their threads for securing meters shall be complete and free of damage and well lubricated. Use them with suitable flat washers and spring washer. A torque wrench shall be used to tighten the bolts according to the flange size and torque. Regularly tighten the bolts during daily use to prevent looseness of the bolts.

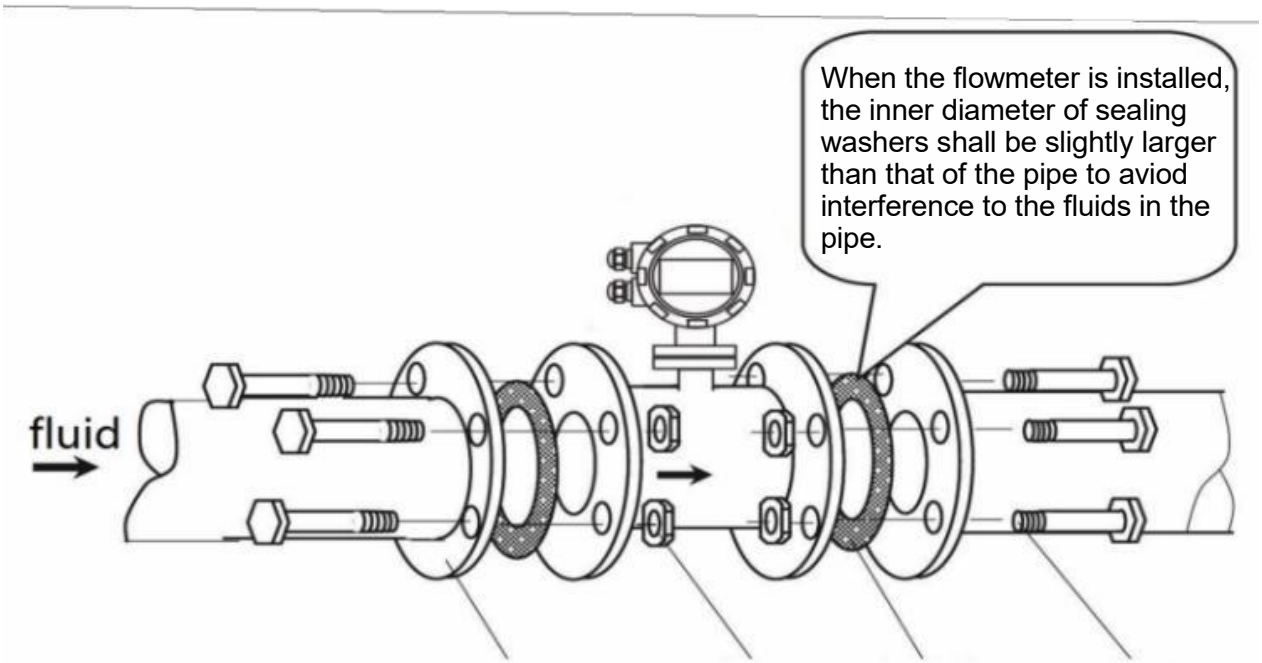

Ordering Code

LDG-SUP-A100-10-J-A-MC-K-AA-M3-N6-WA-00-1-0-PB														Description
LDG-SUP-A100	-	-	-	-	-	-	-							
Nominal diameter	10													DN10(3/8")
	K0													DN10 (Φ50.5mm clamp ferrule)
	15													DN15(1/2")
	K1													DN15 (Φ50.5mm clamp ferrule)
	20													DN20(3/4")
	K2													DN20 (Φ50.5mm clamp ferrule)
	25													DN25(1")
	K3													DN25 (Φ50.5mm clamp ferrule)
	32													DN32(1.25")
	K4													DN32 (Φ50.5mm clamp ferrule)
	40													DN40(1.5")
	K5													DN40 (Φ50.5mmClamp ferrule)
	K6													DN40 (Φ64mm Clamp ferrule)
	50													DN50(2")
	K7													DN50 (Φ64mm Clamp ferrule)
	K8													DN50 (Φ77.5mm Clamp ferrule)
	65													DN65(2.5")
	K9													DN65 (Φ77.5mm Clamp ferrule)
	KA													DN65 (Φ91mm Clamp ferrule)
	80													DN80(3")
	KB													DN80 (Φ91mm Clamp ferrule)

	KC													DN80（Φ106mm Clamp ferrule）
	1C													DN100(4")
	KD													DN100（Φ119mm Clamp ferrule）
	KE													DN100（Φ130mm Clamp ferrule）
	1E													DN125(5")
	KF													DN125（Φ155mm Clamp ferrule）
	1G													DN150(6")
	2C													DN200(8")
	2G													DN250(10")
	3C													DN300(12")
	3G													DN350(14")
	4C													DN400(16")
	4G													DN450(18")
	5C													DN500(20")
	6C													DN600(24")
	7C													DN700(28")
	8C													DN800(32")
	9C													DN900(36")
	A0													DN1000(40")
Process connection	J													JB/T 81 Flange
	D													GB/T9124 Flange
	G													GB/T9119 Flange
	L													EN 1092-1 Flange
	H													HG/T 20592 Flange

	I											ISO 2852 Clamp
	C											ASME B16.5 Flange
	S											JIS B2220 Flange
	X											Others
Nominal pressure	A											PN6
	B											PN10
	C											PN16
	D											PN25
	E											PN40
	F											PN63
	J											JIS 10K
	G											Class 150
	X											Other
Process connection material and body material		MC										Carbon steel
		M1										304SS
		XX										Others
Accuracy			K									0.5 Class
Output and power supply				AA								4-20mA+pulse+RS485, 220VAC
				AM								4-20mA+pulse+RS485, 24VDC
				AE								4-20mA+HART+pulse+RS485，220VAC
				AN								4-20mA+HART+pulse+RS485，24VDC
				AC								Pulse+4-20mA+RS485+SPST，220VAC
				AP								Pulse+4-20mA+RS485+SPST，24VDC
				CE								Pulse+4-20mA+HART+RS485+SPST，220VAC
				CF								Pulse+4-20mA+HART+RS485+SPST，24VDC
Electrode material					M3							316LSS
					MF							Hastelloy B
					MG							Hastelloy C
					T1							Ti
					T2							Ta

	MH						Platinum Iridium Alloy PT
	MJ						WC
	M3						316LSS
	MF						Hastelloy B
Lining material	N6						PTFE
	N1						CR
	N2						PU
	N7						Teflon F46/FEP
Electrical interface, Housing material, and protection level	WA						Integrated Type, M20×1.5 Cable Gland, Aluminum Alloy, IP65
	W5						Integrated Type, M20×1.5 Cable Gland, Aluminum Alloy, IP66/67
	WC						Remote Type, M20×1.5 Cable Gland, Aluminum Alloy, IP68
Cable length for the remote type		00					0m
		10					10m
		15					15m
		20					20m
		25					25m
		30					30m
		XX					Others
Language			1				Chinese
			2				English
			3				Russian
			4				Spanish
			5				Korean
			X				Others
Additional certification				0			None
				C			CCEP
				U			UL
				N			NSF
				H			HJ212-2025
Accessories					PB		Paired with Carbon Steel Flange
					PC		Paired with 304SS Flange
					PE		Paired with SS316L Grounding Ring