

Datasheet

Micro Gas Mass Flow Meter

SUP-FTM210

Supmea

Committed to process automation solutions

Tel: 86-15868103947

E-mail: info@supmea.com

www.supmea.com

Datasheet

Micro Gas Mass Flow Meter
SUP-FTM210

The Micro Gas Mass Flow Meter is an electronic gas mass flow instrument manufactured using a Micro-Electro-Mechanical System (MEMS) flow sensor chip. Designed for industrial environments, the product integrates multiple anti-interference measures and a highly compatible design. It provides multiple signal outputs and supports network management via communication interfaces. Featuring a compact size, light weight, and high measurement accuracy, the meter offers excellent performance, easy installation, and convenient maintenance with high stability. It is widely used in gas measurement and monitoring applications in medical devices, oil & gas, chemical processing, and energy industries.

Features

- Simplified structure, compact size, and light weight.
- Wide measuring range, high accuracy, and fast response.
- Linear output, no compensation required.
- LCD display with clear visualization; 180° rotatable screen.
- Multiple output modes to meet various application requirements.



Micro Gas Mass Flow Meter

Principle

The Micro Gas Mass Flow Meter is based on the heat transfer and heat exchange characteristics of flowing gas. When gas flows through the sensor, temperature variations are generated upstream and downstream, from which the gas mass flow is derived. The meter integrates both a heat source and temperature sensing elements. During operation, a stable temperature field is formed around the sensor. When a certain mass of gas passes through, the airflow disturbs this temperature field, creating a specific temperature distribution related to the gas mass and velocity. The MEMS sensor detects this change and converts it into an electrical signal, which is then amplified, conditioned, and linearized by a dedicated signal processing circuit. Since different gas masses cause different disturbances to the stable temperature field, accurate gas mass flow rate or totalized flow measurement is achieved.

Parameters	
Measured Variables	Mass Flow
Flow Range	（1~100）mL/min, （5~500）ml/min, （10~1000）ml/min, （20~2000）ml/min, （0.2~20）L/min, （0.5~50）L/min, （1~100）L/min, （2~200）L/min
Wide Turndown Ratio	100:1
Accuracy	±2.0%FS
Resolution	0.1%FS
Repeatability	1%FS
Response Time	≤10ms
Transmitter Output	(4–20) mA or (0–20) mA Current Output, Load Resistance ≤ 650 Ω (1–5) V / (0–5) V / (0.5–4.5) V Voltage Output, Output Impedance approx. 1 kΩ
Communication Output	RS485 Interface, MODBUS Communication Protocol
Alarm Output	NPN Alarm Output
Power Supply Input	(9–24) VDC Note: When using (4–20) mA current output, 24 VDC supply is required.
Operating Current	≤60mA
Electrical Interface	GH1.25-5Pin
Medium Type	Air, Oxygen (O_2), Nitrogen (N_2), Argon (Ar), Carbon Dioxide (CO_2)
Process Pressure	≤1MPa
Operating Temperature	0℃~50℃
Operating Humidity	35~85%RH（No icing, no condensation）
Storage Temperature	-20℃~70℃
Protection Rating	IP40

Wiring

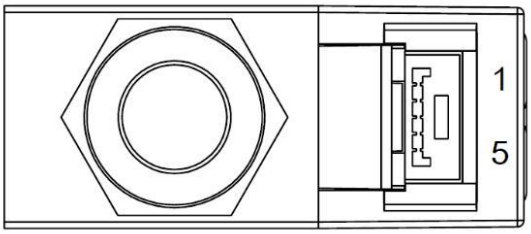

Figure 1 Wiring Diagram

Table 1 Wire Color Code

No.	Color	Description
1	Blue	GND
2	Grey	Analog Current / Analog Voltage / NPN
3	White	RS485 B/NPN
4	Black	RS485 A/NPN
5	Brown	24VDC

Table 2 Wiring Instruction

No.	Color	Mode 1	Mode 2	Mode 3	Mode 4	Mode 5
1	Blue	GND	GND	GND	GND	GND
2	Grey	NPN	Analog Current	Analog Current	Analog Voltage	Analog Voltage
3	White	RS485 B	RS485 B	NPN2	RS485 B	NPN2
4	Black	RS485 A	RS485 A	NPN1	RS485 A	NPN1
5	Brown	24VDC	24VDC	24VDC	24VDC	24VDC

Note: The above combination output configuration supports any single output independently.

Dimension

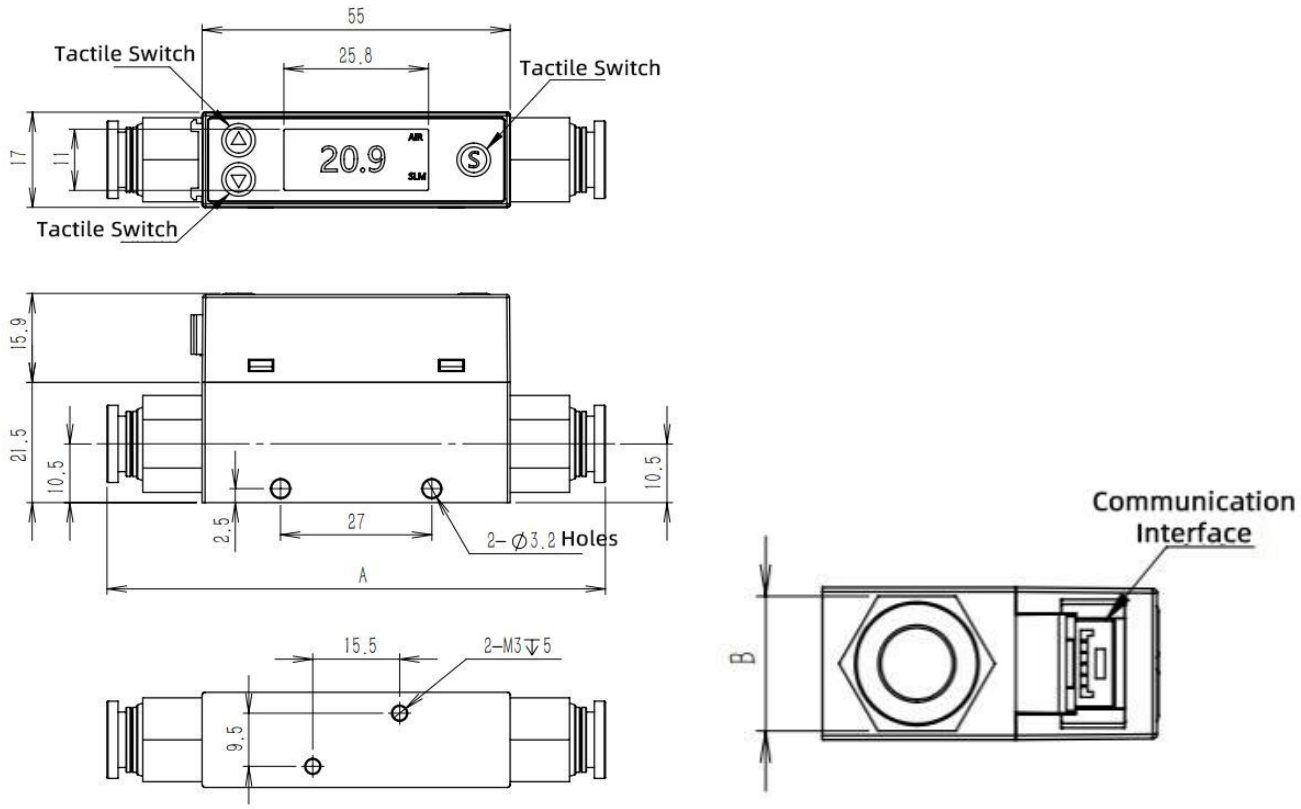

Figure 2 Overall Dimensions of Miniature Gas Mass Flow Meter (Unit: mm)

Table 3 Dimensions of Miniature Gas Mass Flow Meter

Process Connection	A（mm）	B（mm）
Φ6 Push-In Fitting	84	12
Φ8 Push-In Fitting	87	14
Φ10 Push-In Fitting	97	17
Φ12 Push-In Fitting	104.5	20
G1/4 Thread	89	17
R1/4 Thread	89	17

Ordering Code

SUP-FTM210 -A-N-1-BN-J8-D-7-02-0										Description
SUP-FTM210	-	-	-	-	-	-	-	-	-	
Measuring Range	A									1-100mL/min
	B									5-500ml/min
	C									10-1000ml/min
	D									20-2000ml/min
	1									0.2-20L/min
	6									0.5-50L/min
	3									1-100L/min
	4									2-200L/min
	X									Others
Accuracy		N								2.0 Class
Display Type			1							Available
Output and Power Supply				BN						0-20mA+RS485，24VDC
				AJ						4-20mA+RS485，24VDC
				BP						0-20mA+Flow Over-Limit Alarm, 24VDC
				BQ						4-20mA+Flow Over-Limit Alarm, 24VDC
				BR						1-5V+RS485，24VDC
				AS						0-5V+RS485，24VDC
				BW						0.5-4.5V+RS485，24VDC
				BS						1-5V+Flow Over-Limit Alarm, 24VDC
				BT						0-5V+Flow Over-Limit Alarm, 24VDC
				BU						0.5-4.5V+Flow Over-Limit Alarm, 24VDC
				BV						RS485+Flow Over-Limit Alarm, 24VDC
Process Connection					J8					G1/4，304SS
					J1					JB/T 7056 Φ6mm Push-In Fitting, Copper with Nickel Plating
					J2					JB/T 7056 Φ8mm Push-In Fitting, Copper with Nickel Plating
					J3					JB/T 7056 Φ10mm Push-In Fitting, Copper with Nickel Plating

	J4				JB/T 7056 Φ12mm Push-In Fitting, Copper with Nickel Plating
	J7				R1/4，304SS
Measuring Medium		D			Air
		E			Nitrogen
		F			Oxygen
		G			Argon gas
		H			Carbon dioxide
		X			Others
Housing Material and Protection Rating			7		Aluminum Alloy，IP40
Cable Length				02	2m
Test Report					0 Not Available
					1 Available