

Datasheet

Wall-Mounted Ultrasonic Flow Meter

SUP-FSC400

Supmea

Committed to process automation solutions

Tel: 86-15158063876

E-mail: info@supmea.com

www.supmea.com

Datasheet

Wall-Mounted Ultrasonic Flow Meter
SUP-FSC400

The ultrasonic flow meter is suitable for continuous flow measurement of most single-phase homogeneous liquids in industrial environments, provided they do not contain high concentrations of suspended particles or air bubbles. It supports thermal energy measurement by integrating a pair of temperature sensors, enabling heat metering functionality in addition to flow measurement.This product is widely applicable in industries such as petroleum, chemical processing, power generation, food production, and other industrial sectors.

Ultrasonic flow meters are available in two installation types: clamp-on and insertion.The clamp-on ultrasonic flow meter requires no pipe cutting or flow interruption during installation. Simply attach the sensors to the exterior of the pipe — highlighting the ease of installation and user convenience typical of ultrasonic technology.The insertion-type ultrasonic flow meter can also be installed without stopping the flow. A special tool is used to drill a hole in a pressurized pipeline, allowing the sensor to be inserted into the pipe. Since the ultrasonic signal is transmitted and received directly through the measured medium — without passing through the pipe wall or lining — the measurement is unaffected by the material of the pipe wall or any lining.

Features

- Suitable for measuring fluid flow across a wide range of pipe diameters.
- Low startup flow rate, high measurement accuracy, and zero pressure loss.
- Non-intrusive measurement is unaffected by temperature, pressure, or fluid composition.
- No need to cut the pipe during installation — the process is simple, fast, and non-destructive, making it a cost-effective flow measurement solution.
- The wall-mounted remote transmitter unit can be installed on surfaces, inside distribution boxes, or instrument enclosures, enabling convenient long-term monitoring at fixed locations.
- This product also supports thermal energy measurement. By installing temperature sensors on both the supply and return pipes, it enables accurate heat metering.



Wall-Mounted Ultrasonic Flow Meter

Principle

The ultrasonic flow meter operates based on the transit-time measurement principle. It utilizes two ultrasonic sensors that alternately transmit and receive ultrasonic pulses in opposite directions. By observing the difference in transit time between upstream and downstream signals traveling through the fluid, the flow velocity can be indirectly determined, from which the flow rate is subsequently calculated.

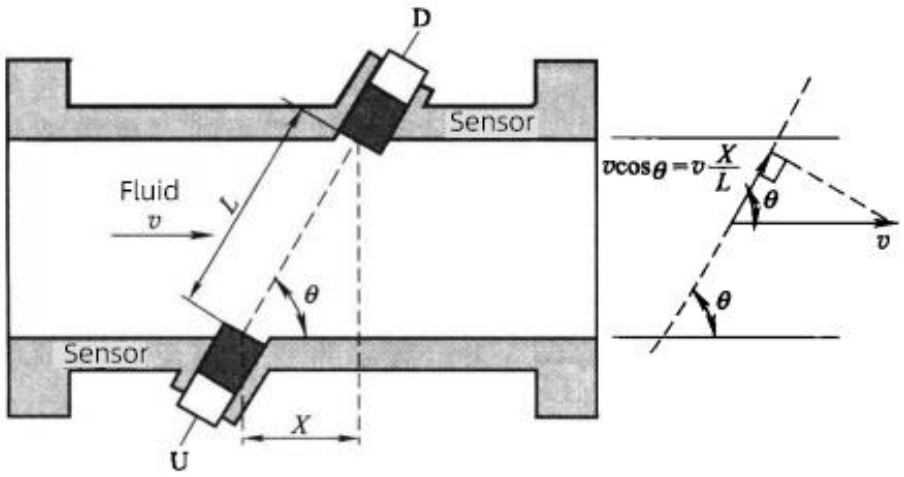

The flow velocity of the fluid between the upstream sensor (U) and the downstream sensor (D) is calculated using Equations (1) and (2):

$$t_{ud} = \frac{L}{C + V_i \cos\theta} \quad \text{(Equation 1)}$$

$$t_{du} = \frac{L}{C - V_i \cos\theta} \quad \text{(Equation 2)}$$

By solving Equations (1) and (2), the average flow velocity vvv and the speed of sound CCC in the fluid can be obtained:

$$v_i = \frac{L}{2\cos\theta} \times \frac{t_{du} - t_{ud}}{t_{du} t_{ud}} = \frac{L^2}{2X} \times \frac{t_{du} - t_{ud}}{t_{du} t_{ud}} \text{(Equation 3)}$$

$$C = \frac{L}{2} \times \frac{t_{du} + t_{ud}}{t_{du} t_{ud}} \text{(Equation 4)}$$

t_{du}— Transit time of the ultrasonic pulse from the upstream sensor U to the downstream

sensor D.

t_{ud}— Transit time of the ultrasonic pulse from the downstream sensor D to the upstream sensor U.

L — Acoustic path length between upstream sensor U and downstream sensor D.

x — Axial distance between the upstream and downstream sensors.

v_i — Average flow velocity of the fluid.

θ — Propagation angle of the acoustic path.

Parameters		
Performance parameters		
Measured variables	Direct measurement variable: flow rate Calculated value of measured variable: volumetric flow	
Typical Flow Velocity Range	0.3m/s~10m/s	
Nominal diameter	Clamp-On Type: DN50 to DN700 Insertion Type: DN50-DN6000	
Accuracy	±1%	
Resolution	0.001m/s	
Repeatability	0.2%	
Operating Frequency	100Hz	
Response Time	0.2s	
Input		
Transmitter Output	Output Type	（4~20）mA
	Output Accuracy	0.1%FS
	Output Load	<500Ω
Communication Output	Output Type	RS485
	Communication Protocol	MODBUS
Frequency/Pulse Output	Pulse Width	Self-Adaptation Configurable
	Pulse Factor	Self-Adaptation Configurable
Electrical Specifications		
Power supply	AC：（85-265）VAC DC：（10~30）VDC	
Power consumption	1.5W	
Electrical interface	M20*1.5	
Process conditions		
Medium temperature	-30℃-90℃	
Environmental conditions		
Ambient temperature	-20℃-60℃	
Storage temperature	-40℃-80℃	
Level of protection	IP65	

Wiring

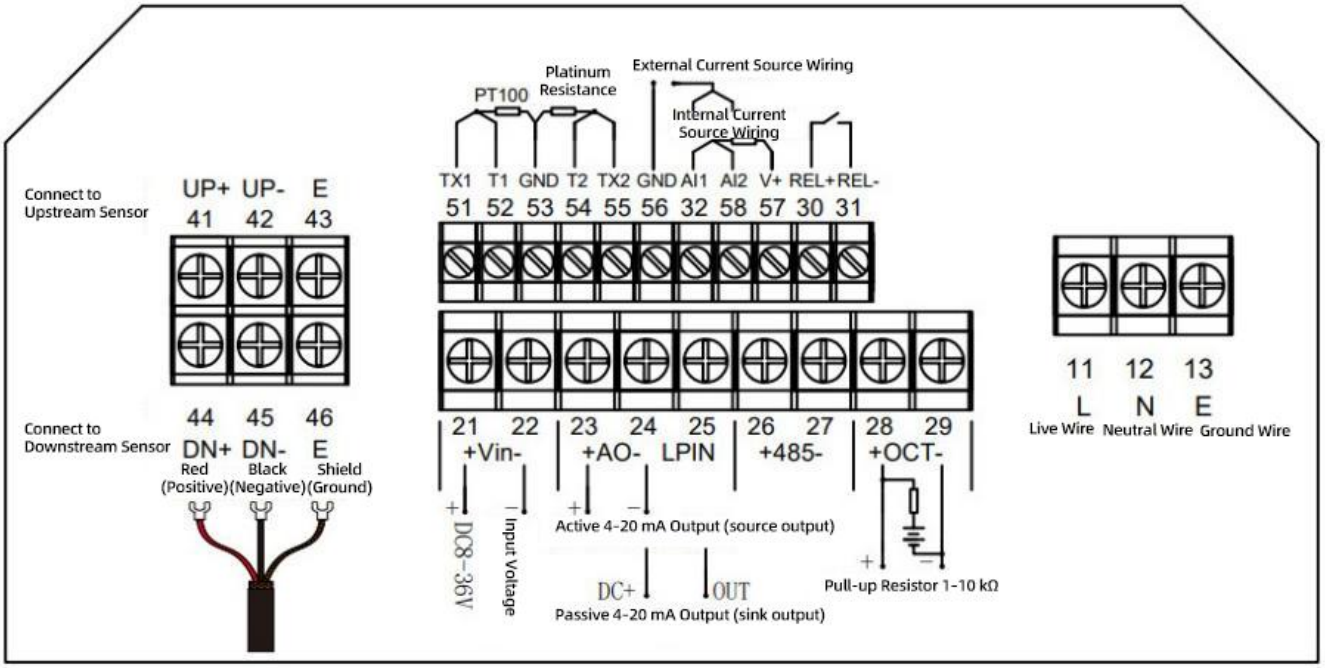

Figure 1 Terminal Diagram

Dimension

Main Unit Dimensions

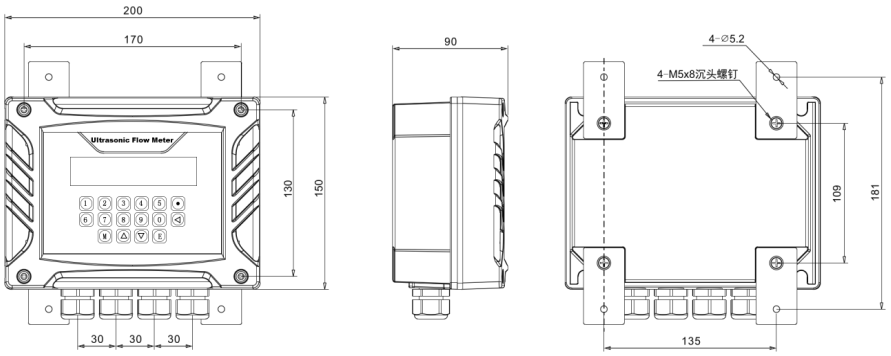

Figure 2 Main Unit Dimensions (Unit: mm)

Clamp-On Sensor Dimensions

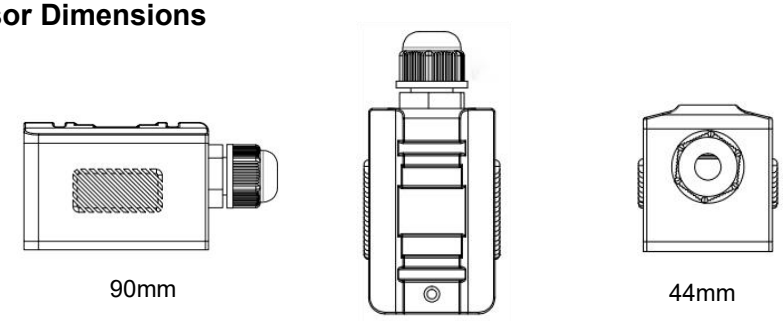

Figure 3 Clamp-On Sensor Dimensions

Insertion Sensor Dimensions

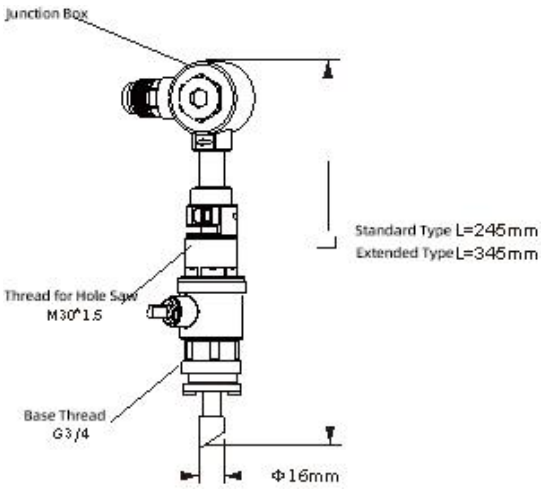

Figure 4 Insertion Sensor Dimensions

Ordering code

SUP-FSC400 -W3-T7-L-AD-WY-05							Description
SUP-FSC400	-	-	-	-	-	-	
Sensor Type	W3						Medium Clamp-On Type (DN50 – DN700)
	C1						Standard Insertion Type (DN80 – DN6000)
	C2						Extended Insertion Type (DN80 – DN6000)
	XX						Other
Heat Resistance Temperature		T7					-30-90℃
		XX					Other
Accuracy			L				1.0 Class
Output and Power Supply				AD			Pulse + 4 – 20 mA + RS485 + SPST Relay, Dual Power Supply (24VDC / 220VAC)
Electrical Interface, Housing Material, and Protection Rating					WY		M20*1.5Cable Gland，Plastic ABS，IP65
					WZ		M20*1.5Cable Gland，Plastic ABS，IP68
Cable Length						05	5m
						10	10m
						20	20m
						XX	Other