

Datasheet

Electromagnetic flow meter

FMC400

Supmea®

Committed to process automation solutions

E-mail: info@supmea.com

www.supmea.com

Datasheet

Electromagnetic flow meter
FMC400

The electromagnetic flowmeter is designed based on the Faraday electromagnetic induction principle and are used to directly measure the flow rate of conductive liquids in closed pipelines. During on-site monitoring and display, standard current signals, pulse signals, and RS485 digital signals can be output for recording, adjustment, and control, achieving automatic detection and control.

It can be widely used in industries such as tap water, chemical industry, coal, environmental protection, light textile, metallurgy, papermaking, etc.

Applications

- Tap water
- Chemical industry
- Coal
- Environmental protection
- Light textile
- Metallurgy
- Papermaking

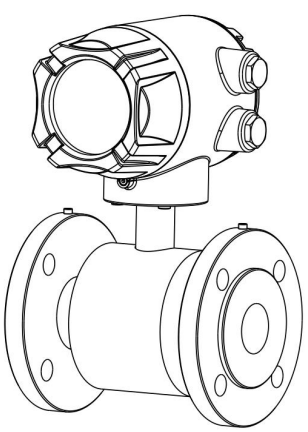

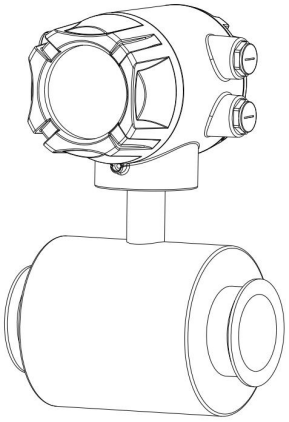

Features

- Reliable measurement, high accuracy, and good stability.
- Integrated structure, no moving parts, easy to install, maintenance free.
- RS485 communication interface - standard Modbus RTU protocol.
- It is not affected by the direction of the fluid and can be accurately measured in both directions.
- Adopting advanced low-frequency square wave excitation, zero point stability, strong anti-interference ability, and reliable operation.
- The orientation of the header/display interface can be adjusted for easy reading.

Electromagnetic flow meter

- Built in bilingual Chinese and English, allowing for free switching.
- Suitable for measuring low conductivity media.
- Suitable for slurry measurement.
- Suitable for filling measurement.

Principle

The measurement principle of magnetic flowmeters can be described as follows: when the liquid goes through the pipe at the flow rate of v with a diameter D, within which a magnetic flux density of B is created by an exciting coil, the following electromotive E is generated in proportion to flow speed v:

$$E=K\times B\times V\times D$$

Where:

E—Induced electromotive force
K—Meter constant
B—Magnetic induction density
V—Average flow speed in cross-section of measuring tube
D—Inner diameter of measuring tube

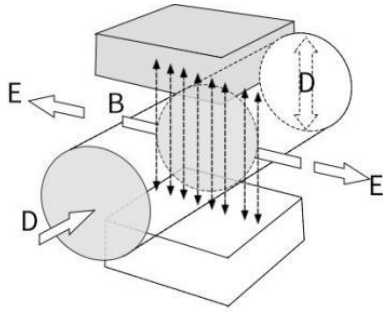

The induced voltage signal is detected by two electrodes and transmitted to the converter via a cable. After a series of analog and digital signal processing, the accumulated flow and real-time flow are displayed on the display of the converter.

Accuracy

Reference condition

Measurement value±0.5%(Flow velocity 0.5m/s~5m/s)

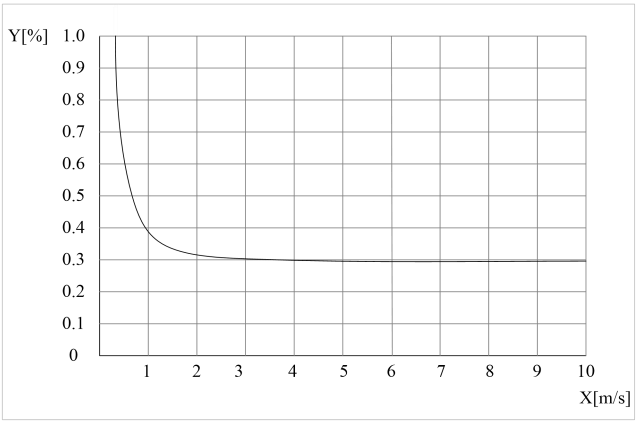

①X[m/s]：Velocity of flow

②Y[%]：Actual measured value deviation

Parameters		
Measured variable	Direct measured variables ： Flow velocity Calculated measured variables ： Volume flow , mass flow	
Velocity of flow	Typically Velocity of flow：0.5m/s~5m/s	
Nominal diameter	DN10~DN1000	
Range ratio	1:10	
Current output	Function	Measurement of volume and quality (in the case of constant density)
	Setting	Scope (4~20)mA Max 20mA Min 4mA
	Active	Corresponding terminals IOUT, ICOM
	Loading	≤750Ω
Pulse output	Function	Set up Pulse and frequency output
	Puls e output	Basis：Output pulse width: 0.1ms ~400ms Optional automatic or manual mode Pulse coefficient：0.001L~10000.000L
	Passive	Turn the two red toggle switches to the OFF
	Active	Turn the two red toggle switches to the ON
Communications	RS485 serial , MODBUS-RTU communication protocol	
Supply voltage	AC：85V~264V,50Hz~60Hz DC：18V~28V	
Power consumption	≤8W	
Cable entries	M20*1.5 Cable gland	

Wiring

Terminal	Description
L，N	220V AC power supply
24V+、24V-	24V DC power supply
TX+, TX-	RS485 serial communication
IOUT，ICOM	(4~20)mA output
POUT，PCOM	Pulse output
⏚	Converter instrument protection grounding

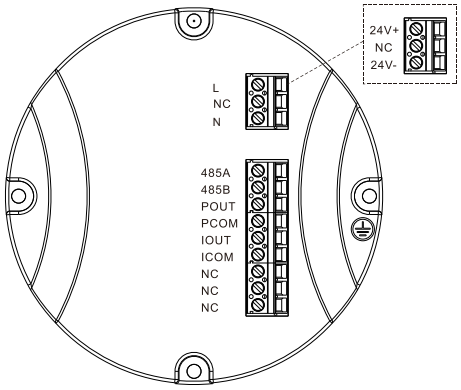

5.5.1.Current output

① 1 IVee：Current output power supply

② 2 IOUT：Current output

③ 3 ICOM：Current output ground

The current output has three terminals: IOUT (I+), ICOM (I -), and IVee, supporting two current output modes: two wire active current output and two wire passive current output.

The wiring terminals are IOUT (I+) and ICOM (I -)

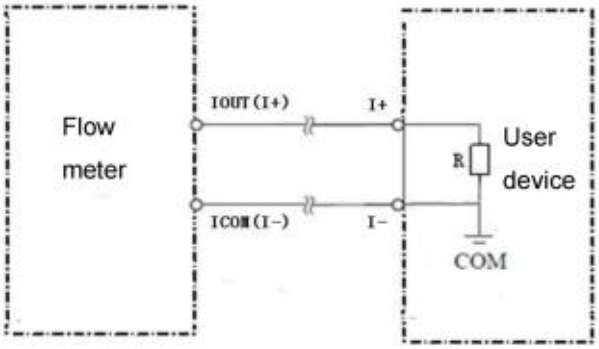

Fig.19

Output mode 2: 2-wire passive current output

The wiring terminals are IOUT (I+) and IVee.

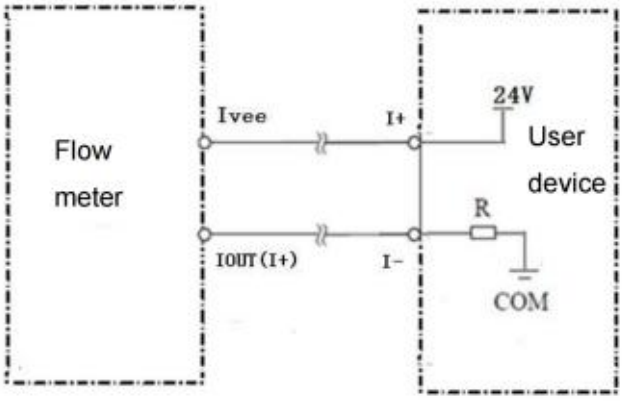

Frequency and pulse output

Frequency output and pulse output share a set of wiring terminals POUT (P+) and PCOM (P -), and frequency or pulse output can be selected through the menu.

Output mode 1: OC gate passive output, user side connected pull-up resistor.

The two digit toggle switches on the wiring board are both turned down (OFF position).

POUT (P+) output frequency/pulse signal.

The external power supply V+can be 5V/12V/24V, and the resistance range of the pull-up resistor R is 2k~ 10k.

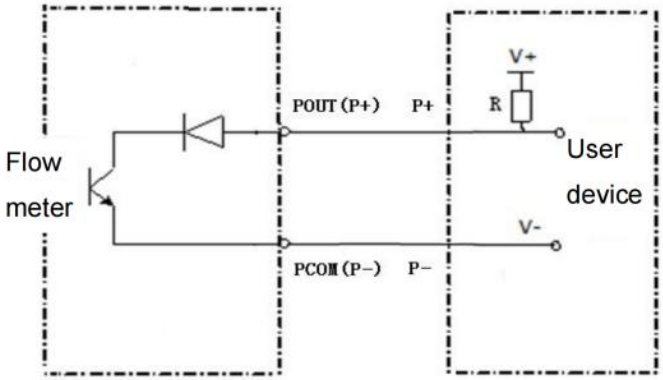

Output mode 2: OC gate passive output, user side connected pull-down resistor.

The two digit toggle switches on the wiring board are both turned down (OFF position).

PCOM (P -) output frequency/pulse signal.

POUT (P+) is directly connected to an external power source V+.

This mode is commonly seen in the combination system of flow meters and PLCs.

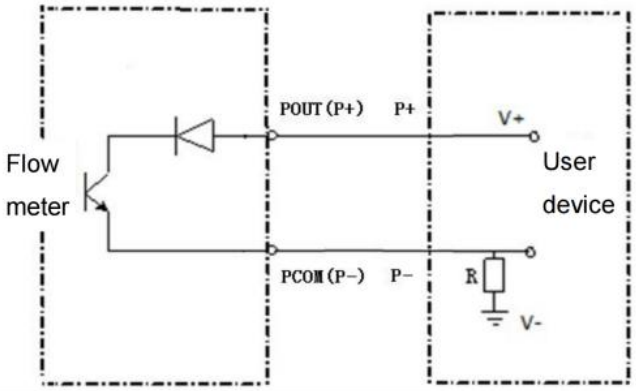

Output mode 3: Active output in level mode, which can directly drive the load.

The two digit toggle switches on the wiring board are both facing upwards (ON position).

POUT (P+) output frequency/pulse signal.

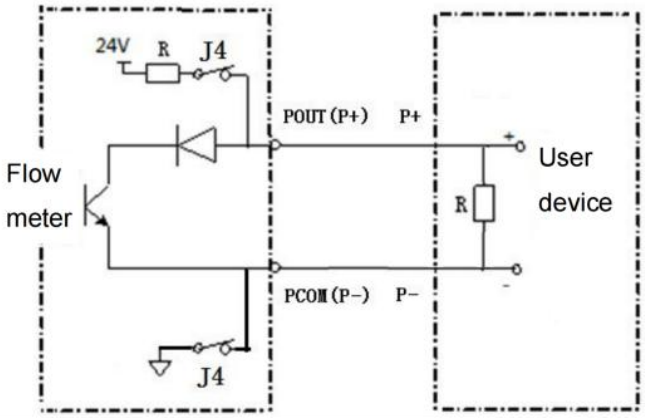

Dimension

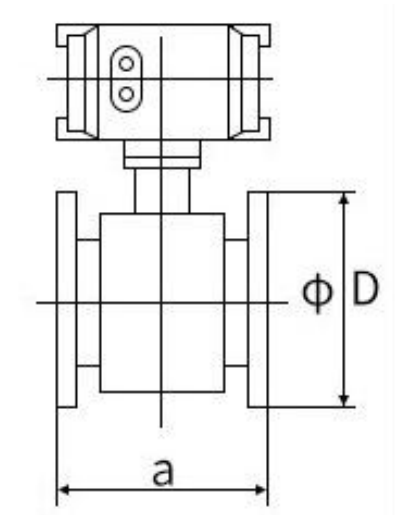

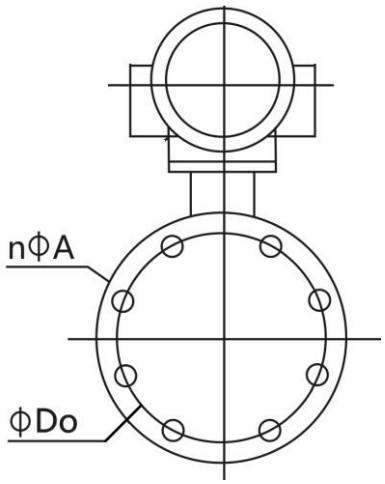

Sensor Dimensions

DN	a	D	Do	n*A	Pressure resistance
10	200	90	60	4*14	1.6MPa
15	200	95	65	4*14	1.6MPa
20	200	105	75	4*14	1.6MPa
25	200	115	85	4*14	1.6MPa
32	200	135	100	4*18	1.6MPa
40	200	145	110	4*18	1.6MPa
50	200	160	125	4*18	1.6MPa
65	200	180	145	4*18	1.6MPa
80	200	195	160	8*18	1.6MPa
100	250	215	180	8*18	1.6MPa
125	250	245	210	8*18	1.6MPa
150	300	280	240	8*23	1.6MPa
200	350	335	295	12*23	1.6MPa
250	450	405	355	12*25	1.6MPa
300	500	440	400	12*23	1.0MPa
350	550	500	460	16*23	1.0MPa
400	600	565	515	16*25	1.0MPa
450	600	615	565	20*25	1.0MPa
500	600	670	620	20*25	1.0MPa
600	600	780	725	20*30	1.0MPa
700	700	895	840	24*30	1.0MPa
800	800	1015	950	24*33	1.0MPa
900	900	1115	1050	28*33	1.0MPa
1000	1000	1230	1160	28*36	1.0MPa

Ordering code

FMC400-15-J-B-MC-K-AA-M3-N6-WA-PB													Description
FMC400	-	-	-	-	-	-	-	-	-	-	-	-	
Nominal Diameter	15												DN15 (1/2")
	20												DN20 (3/4")
	25												DN25 (1")
	32												DN32 (1. 25")
	40												DN40 (1. 5")
	50												DN50 (2")
	65												DN65 (2. 5")
	80												DN80 (3")
	1C												DN100 (4")
	1E												DN125 (5")
	1G												DN150 (6")
	2C												DN200 (8")
	2G												DN250 (10")
	3C												DN300 (12")
	3G												DN350 (14")
	4C												DN400 (16")
	4G												DN450 (18")
	5C												DN500 (20")
	6C												DN600 (24")
Thread Type Standard		J											JB/T 81 Flange
		X											Other
Nominal Pressure			B										PN10
			C										PN16
			X										Other
Thread Type Material and Body Material				MC									Carbon Steel
				XX									Other
Accuracy					K								0.5 Class
Output and Power Supply						AA							4-20mA+Pulse+RS485, 220VAC
						AM							4-20mA+Pulse+RS485, 24VDC
Electrode Material							M3						316LSS
							MF						Hastelloy B
							MG						Hastelloy C
							T1						Titanium
							T2						Tantalum
							MH						Platinum Iridium Alloy
							MJ						Tungsten Carbide
Lining Material								N6					Polytetrafluoroethylene

	N1				Chloroprene Rubber
	N2				Polyurethane
	N7				Teflon F46/FEP
Electrical Interface, Housing Material, and Ingress Protection		WA			Integrated Type, M20×1.5 Cable Gland, Aluminum Alloy, IP65
Accessories			PB		Paired with Carbon Steel Flange
			PC		Paired with 304SS Flange
			PE		Paired with SS316L Grounding Ring