

Datasheet

Miniature Turbine Flow Meter

SUP-FLM200

Supmea

Committed to process automation solutions

Tel: 86-15868103947

E-mail: info@supmea.com

www.supmea.com

Datasheet

Miniature Turbine Flow Meter
SUP-FLM200

The miniature turbine flow meter features a simple structure, high accuracy, and ease of installation and maintenance. It enables real-time monitoring of both liquid flow rate and temperature in pipelines. The device supports output via (4 – 20) mA signals or RS485 communication, along with alarm switch output. An integrated OLED display provides real-time visualization of flow and temperature, realizing a compact and efficient dual-parameter monitoring solution.
It is widely used in industries such as petrochemical, electric power, metallurgy, steel mills, paper manufacturing, food processing, water treatment, and battery production.

Features

- Integrated temperature and flow measurement for real-time monitoring in pipelines.
- Supports both digital communication and analog output in a single device.
- Intelligent alarm output for flow and temperature thresholds.
- Self-luminous OLED display, sharp and easy to read.
- Electronics module separated from the base, allowing easy component replacement and maintenance.
- Rotatable display panel (180°) by loosening four screws—convenient for adjusting wiring direction.
- 304 stainless steel base and aluminum alloy housing, resistant to scaling and corrosion.
- IP65 protection rating, suitable for harsh industrial environments.



Miniature Turbine Flow Meter

Principle

A magnetic rotor (impeller) is installed inside the flow channel. When fluid passes through the meter, it strikes the blades, causing the rotor to spin. The rotational speed of the rotor is proportional to the flow velocity. As the rotor spins, a Hall effect sensor generates a pulse frequency signal proportional to the flow rate. The transmitter converts this signal into an electrical output, which is then transmitted to a display device, enabling the user to view instantaneous and total flow values.

Parameters					
Input					
Measured Variables	Flow and Temperature				
Flow and Temperature Nominal Diameter & Flow Measurement Range	Nominal Diameter	DN10	DN15	DN20	DN25
	Flow Rate Range（L/min）	3~20	10~100	12~120	16~160
Temperature Measurement Range	0℃~100℃				
Output					
Transmitter Output	Flow / Temperature: (4–20) mA, Load Resistance ≤ 500Ω				
Alarm Output	PNP Alarm Contact, Contact Capacity: 24V / 50 mA				
Communication Output	RS485, MODBUS-RTU Protocol				
Electrical Specifications					
Power Supply Input	24VDC				
Power Consumption	＜3W				
Electrical Interface	M12 × 1.5 Aviation Connector				
Performance Parameters					
Accuracy	Flow:1.5 Class Temperature:±1℃				
Insulation Resistance	≥ 50 MΩ at 100 VDC				
Process Conditions					
Medium Type	Liquid (e.g., water, glycol-based solutions, lubricating oil, etc.)				
Medium Viscosity	≤68cst				
Medium Temperature	0℃~100℃				
Process Pressure	Refer to Table 2				
Environmental Conditions					
Ambient Temperature	-20℃~85℃				
Relative Humidity	＜95%				
Protection Rating	IP65				

Wiring

1.Terminal Description

The flow meter uses a 5-pin waterproof aviation connector. Terminals OUT1, OUT2, and OUT3 support four types of output functions:flow alarm output,temperature alarm output,flow (4–20) mA output,temperature (4–20) mA output.Additionally, one RS485 communication output is supported.

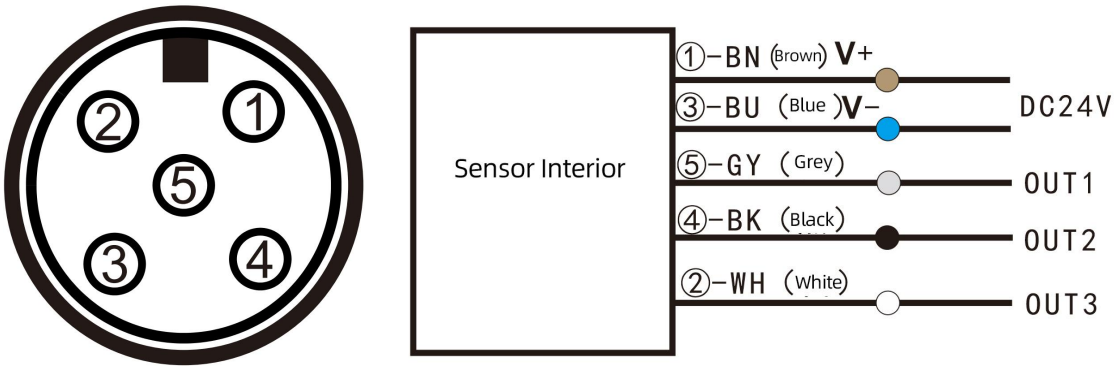

Figure 1 Aviation Connector

Table 1 Terminal Definitions

Pin No.	Wire Color	Description
①	Brown	Power Supply Positive
③	Blue	Power Supply Negative
⑤（OUT1）	Gray	● Flow/Temperature Alarm Output ● Flow/Temperature (4–20) mA Output
④（OUT2）	Black	● Flow/Temperature Alarm Output
②（OUT3）	White	● Flow/Temperature Alarm Output ● Flow/Temperature (4–20) mA Output
⑤+②（RS485）	Gray + White	RS485 Communication Output

2.Wiring Diagram

(1) Alarm + (4–20) mA Output Type

2-channel PNP alarm outputs, 1-channel (4–20) mA analog output

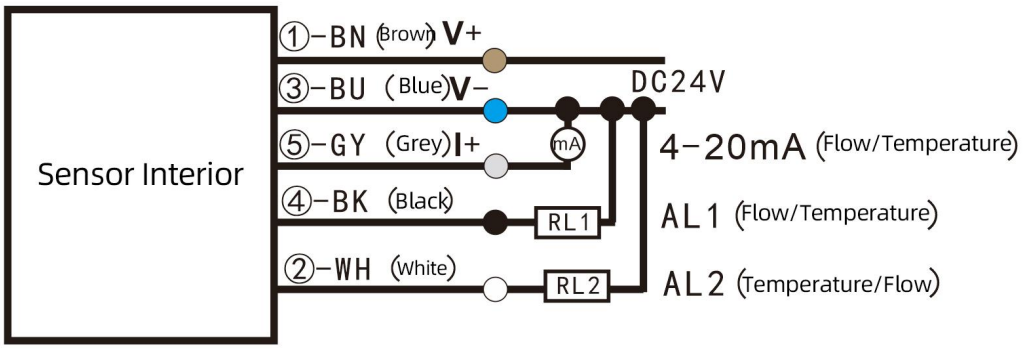

Figure 2

1-channel PNP alarm output, 2-channel (4–20) mA analog outputs

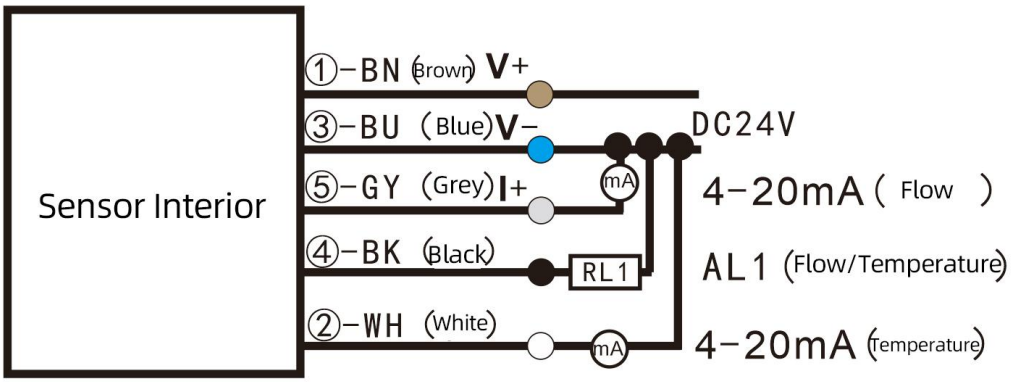

Figure 3

(2) Alarm + RS485 Output Type

1-channel PNP alarm output, 1-channel RS485 communication output

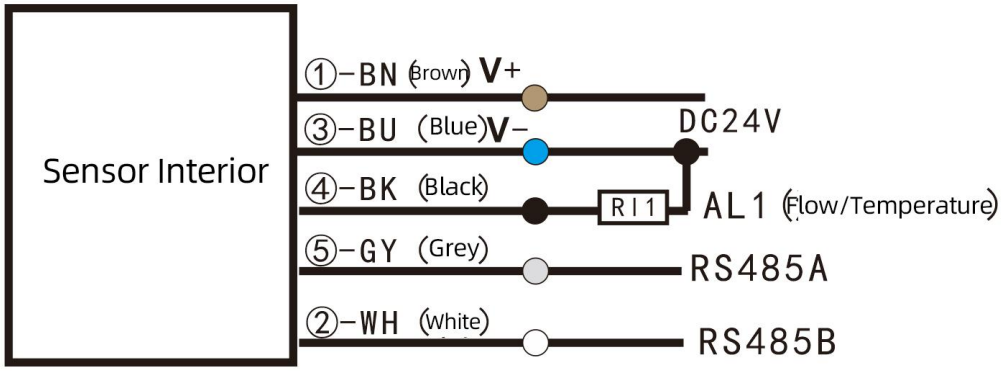

Figure 4

Dimension

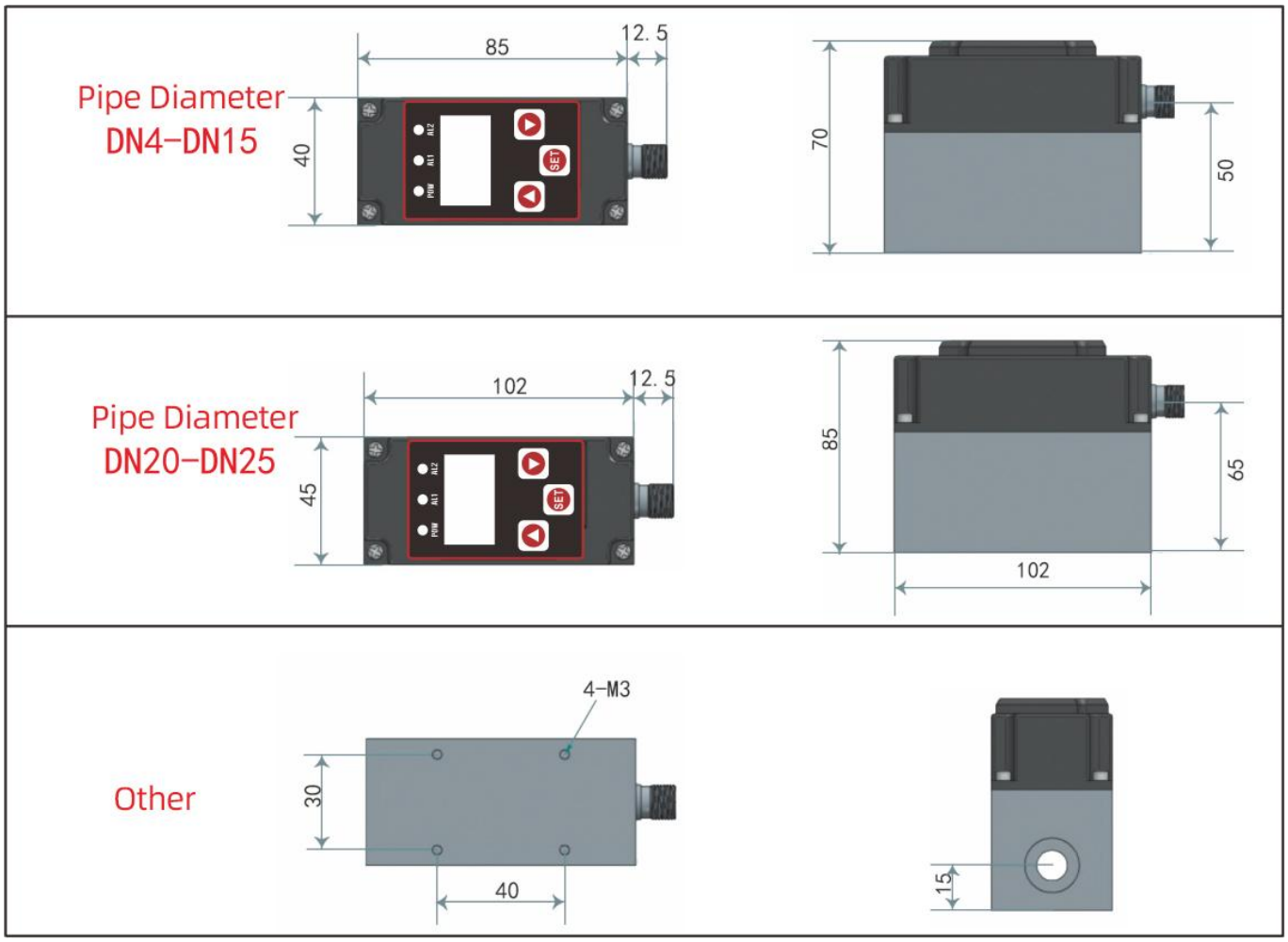

Figure 5

Table 2 Process Connection

Pipe Diameter	Threaded Connection	Process Pressure
DN10	G 1/2	6.3MPa
DN15	G 1/2	6.3MPa
DN20	G 3/4	6.3MPa
DN25	G 1	6.3MPa

Ordering code

SUP-FLM200 -10-IB-NT-6-K8-TT-5-02									Description
SUP-FLM200	-	-	-	-	-	-	-	-	
Nominal Diameter	10								DN10(3/8")
	15								DN15(1/2")
	20								DN20(3/4")
	25								DN25(1")
	XX								Other
Process Connection and Body Material		IB							G-type Internal Thread (BSPP) 304SS
Impeller Material			NT						430FSS
			M7						2Cr13 SS
			MD						Duplex Stainless Steel 2205
Measurement Range and Accuracy				6					Standard Range, Accuracy Class 1.5
Output, Display, and Power Supply					K8				4-20mA+PNP,Display,24VDC
					K9				RS485+PNP,Display,24VDC
					XX				Other
Heat Resistance Temperature						TT			0-100℃
Housing Material and Protection Rating							5		Aluminum Alloy, IP65
Cable Length								02	2m
								05	5m
								10	10m
								XX	Other