

Datasheet

Turbine Flowmeter

SUP-FLC420

Supmea

Committed to process automation solutions

Tel: 86-15868103947

E-mail: info@supmea.com

www.supmea.com

Datasheet

Turbine Flowmeter

SUP-FLC420

The turbine flowmeter is a velocity-type instrument used to measure the volumetric flow rate of low-viscosity liquids in closed pipelines, such as water, liquefied petroleum gas, refined petroleum products, light crude oil, organic liquids, and inorganic liquids free of fibers and particulate impurities. Featuring a simple structure, high accuracy, and easy installation, operation, and maintenance, the product is widely used for flow monitoring and control of small-flow media in industries such as pharmaceuticals, chemicals, food and beverage, and small-scale production lines.

Applications

- Pharmaceuticals
- Chemicals
- Food and beverage
- Small-scale production lines



Vortex Flowmeter

Features

- High accuracy and good repeatability.
- Wide range ratio, up to 10:1.
- Multiple structural designs for convenient user selection.
- Simple structure, easy to install and use.
- Low power consumption.
- No sealing ring, no leakage.

Principle

When the measured liquid flows through the flowmeter sensor, its internal impeller rotates with the help of liquid kinetic energy. At this time, the impeller blade makes the magnetic resistance in the detection device to change periodically. Therefore, an electric pulse signal proportional to the flow rate is induced at both ends of the detection coil, and is amplified by the preamplifier then sent to the display unit. The single chip microcomputer system in the display unit calculates according to the number of pulses measured and the meter coefficient K of the flowmeter, and displays the instantaneous flow rate and the accumulated total amount.

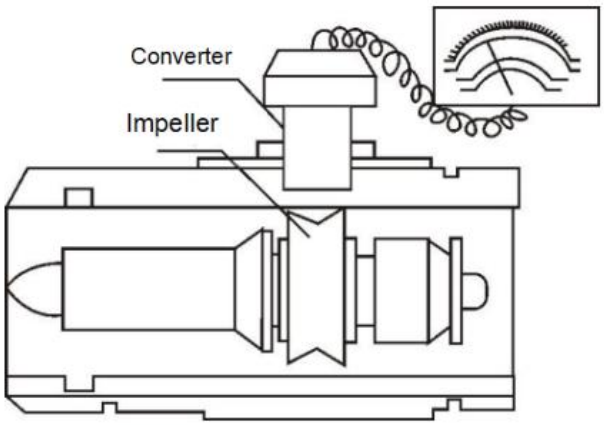

Fig.1

The relationship between the meter coefficient and instantaneous flow, frequency, pulse number, and cumulative total is:

$$K=f/Q \text{ and } K=N/V$$

In the formula:

f—flow signal frequency (Hz)

Q—instantaneous flow rate (m^3/s, or /L/s)

N—pulse number

V—Total volume (m^3)

Parameters

Input		
Measured variable	Volumetric flow	
Nominal diameter and flow range	Diameter	Flow range
	DN10	(0.2~1.2)m^3/h
	DN15	(0.6~6)m^3/h
	DN20	(0.8~8)m^3/h
	DN25	(1~10)m^3/h
	DN32	(1.5~15)m^3/h
	DN40	(2~20)m^3/h
	DN50	(4~40)m^3/h
	DN65	(7~70)m^3/h
	DN80	(10~100)m^3/h
	DN100	(20~200)m^3/h
	DN125	(25~250)m^3/h
	DN150	(30~300)m^3/h
	DN200	(80~800)m^3/h
Range ratio	DN10	1: 6
	DN15~DN200	1: 10
Output		
Pulse output	Pulse width	Maximum 500ms (divided evenly according to frequency)
	Pulse frequency	(1~2000)Hz (depending on turbine diameter)
	Pulse coefficient	Depending on the turbine diameter
Transmitter output	Output type	Two wire (4-20)mA output
	Accuracy	0.1%
	Output load	750Ω@24VDC
Power supply		
Power supply	DC: (12~24)V	
Power consumption	24VDC power supply: Maximum power consumption 0.5W 12VDC power supply: Maximum power consumption 0.15W	
Electrical interface	Aviation connector or Hirschmann connector	
Performance Characteristics		
Accuracy	Level 1.0	

Repeatability	1/3 of the accuracy level	
Response time	250ms	
Process		
Medium viscosity	less than 5×10^{-6} m²/s (for liquids with a flow rate greater than 5×10^{-6} m²/s, the flowmeter must be calibrated with actual liquid before use)	
Medium temperature	(-20 ~ 80)℃ (stainless steel measuring tube) (-20 ~ 150)℃ (High-temperature type)	
Process connection	Threaded	DN10~DN50:PN<6.3MPa DN65~DN100:PN<1.6MPa
	Flange	DN10~DN200:PN<1.6MPa
	Clamp	DN10~DN50:PN<1.6MPa DN65~DN100:PN<1.0MPa
Environment		
Ambient	Temperature: (-20~60)℃ Relative humidity: 5%～90%	
Storage	Temperature: (-40~65)℃ Relative humidity: ≤85%	
Protection level	IP65(pulse head: IP00)	

Dimensions

(1) Structure

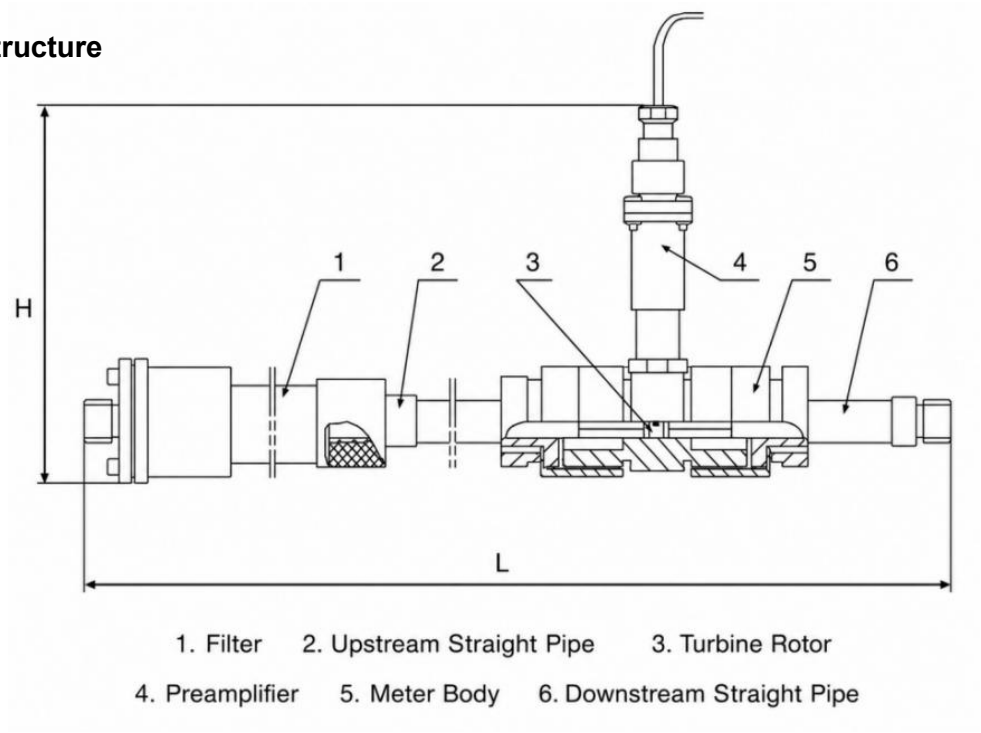

Fig.2 Dimension diagram of the turbine flowmeter

(2) Pre-amplifier Dimensions

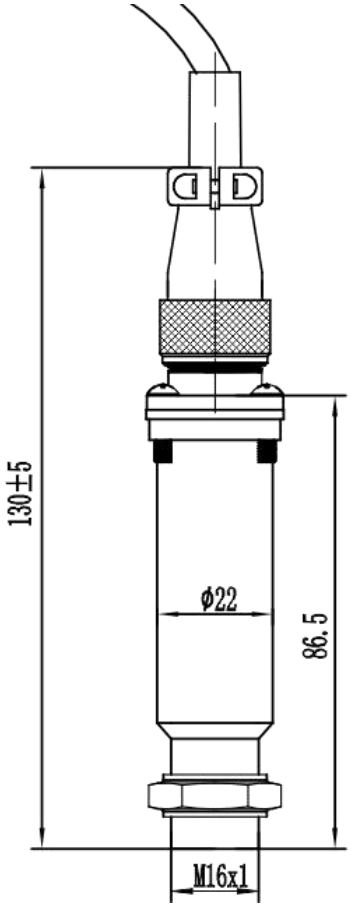

Fig.3 Pulse head with aviation connector (Unit: mm)

Pulse Head with Hirschmann Connector

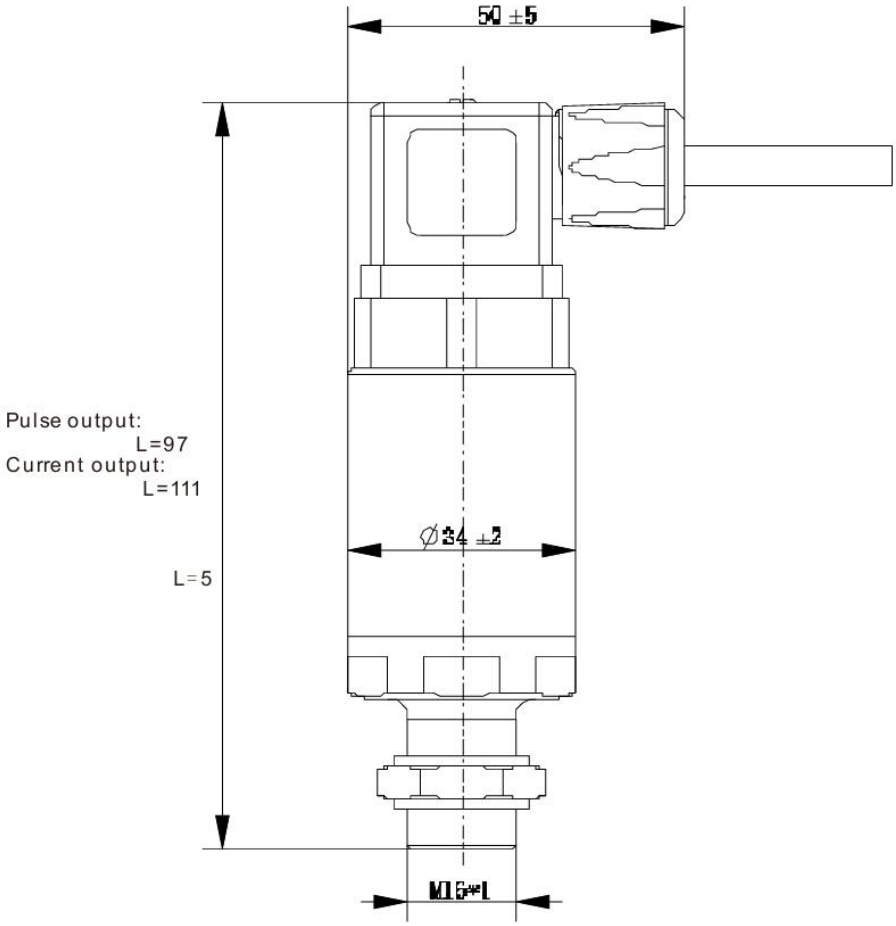

Fig.4 Pulse head with Hirschmann connector (Unit: mm)

(3) Sensor Dimensions

The flowmeter can be divided into threaded connection, flange connection, and clamp connection according to the connection mode of the meter body.

Table 1 Sensor structure diagram

Process connection	Sensor structure diagram	
Flange connection (Standard: HG/T 20592-2009)	DN10 (including straight pipe section): 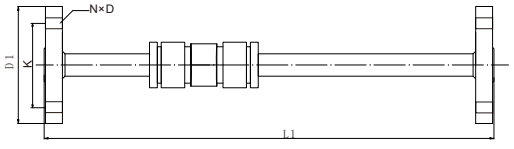	DN15~200: 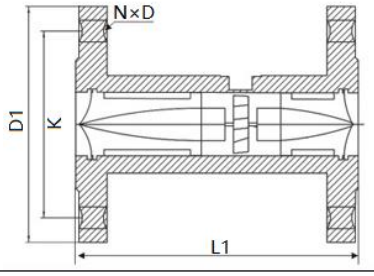
Threaded connection (Standard: GB-T 7307-2001)	DN10 (including straight pipe section):	DN15~DN100:

	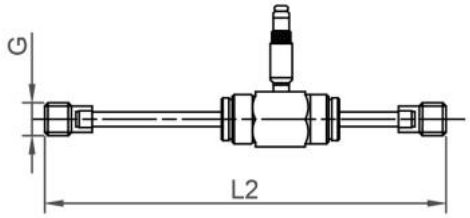	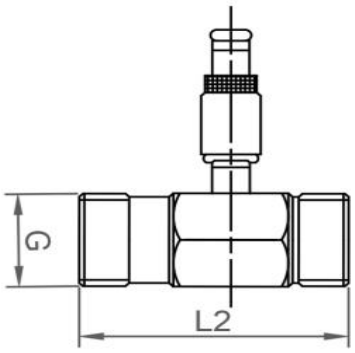
Clamp connection	DN10 (including straight pipe section): 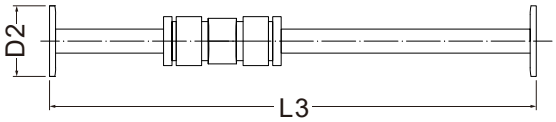	DN15~DN100: 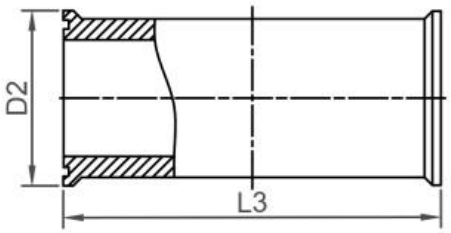

Table 1 Sensor dimensions (unit: mm)

DN (mm)	Flange connection					Threaded connection		Clamp connection	
	L1 (mm)	D1 (mm)	K (mm)	D (mm)	N (holes)	L2 (mm)	G (External thread)	L3 (mm)	D2 (mm)
10	345	90	60	14	4	345	G1/2	345	50.5
15	75	95	65	14	4	75	G1	75	50.5
20	85	105	75	14	4	85	G1	85	50.5
25	100	115	85	14	4	100	G1 1/4	100	50.5
32	120	140	100	18	4	120	G1 1/2	120	50.5
40	140	150	110	18	4	140	G2	140	64
50	150	165	125	18	4	150	G2 1/2	150	78
65	175	185	145	18	8	175	G3	175	91
80	200	200	160	18	8	200	G3 1/2	200	106
100	220	220	180	18	8	220	G4 1/2	220	119
125	250	250	210	18	8	/	/	/	/
150	300	285	240	22	8	/	/	/	/
200	360	340	295	22	12	/	/	/	/

(4) Material

Casing: 304SS

Body: 304SS or 316LSS

Rotor: Duplex steel 2205 or 430F stainless steel

Process connection: 304SS or 316LSS

Electrical Connection

（1）Wiring of Turbine Flowmeter with Aviation Connector

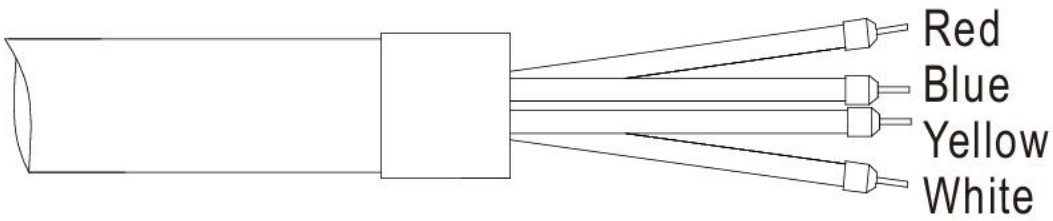

Fig.5 Pulse output wiring description

Table 2 Wiring definition

Output	Pins color	Description
Pulse output (active)	Red	Power+
	Blue	Power- (Pulse signal reference)
	Yellow	Pulse signal output
	White (Shielded)	Grounding

（2）Wiring of Turbine Flowmeter with Hirschmann Connector

Current Output Type

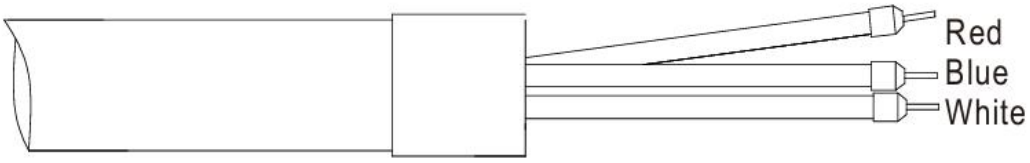

Fig.6 Two-wire current output

Pulse Output Type

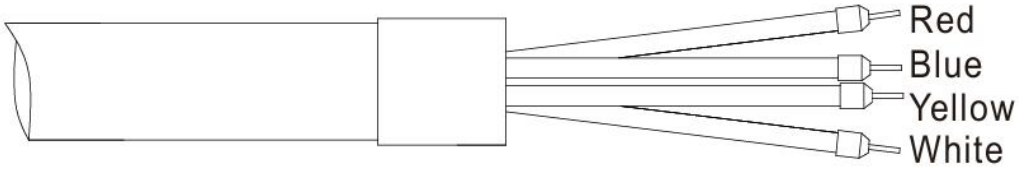

Fig.7 Pulse output

Table 3 Wiring definition

Output Type	Pin Color	Description
(4~20) mA Output	Red	Power + / Current Signal Output
	Blue	Power - / Current Signal Return
	White (Shield)	Grounding
Active Pulse Output	Red	Power +
	Blue	Power - (Pulse Signal Reference)
	Yellow	Pulse Signal Output
	White (Shield)	Grounding

Ordering code

SUP-FLC420-10-B-M1-NT-1-TG-K0-WF									Description
SUP-FLC420	-	-	-	-	-	-	-	-	-
Nominal diameter	10								DN10(3/8")
	K0								DN10 (Φ50.5mm ferrule)
	15								DN15(1/2")
	K1								DN15 (Φ50.5mm ferrule)
	20								DN20(3/4")
	K2								DN20 (Φ50.5mm ferrule)
	25								DN25(1)
	K3								DN25 (Φ50.5mm ferrule)
	32								DN32(1.25")
	K4								DN32 (Φ50.5mm ferrule)
	40								DN40(1.5")
	K6								DN40 (Φ64mm ferrule)
	50								DN50(2)
	K8								DN50 (Φ77.5mm ferrule)
	65								DN65(2.5")
	KA								DN65 (Φ91mm ferrule)
	80								DN80(3)
	KC								DN80 (Φ106mm ferrule)
	1C								DN100(4)
	KD								DN100 (Φ119mm ferrule)
Process connection standard		B							G thread
		H							HG/T 20592 Flange
		I							ISO2852 Clamp
Process connection material and body material			M1						304SS
			M3						316LSS
Impeller material				NT					430FSS
				MD					Duplex stainless steel 2205
Measuring range and accuracy					1				Standard range, Class 1.0
					X				others
Heat resistance temperature						TG			-20 to 80℃
Output, display and power supply							K0		Pulse, no display, 24VDC
							KL		4-20mA, no display, 24VDC

	XX		other
Electrical interfaces, housing material and protection level		WF	Aviation connector, IP00
		W8	Hirschmann connector，IP65