Micro Mass Flowmeter



Supmea

Headquarters

5th floor,Building 4,Singapore Hangzhou Science Technology Park,No. 6 street,
Hangzhou Economic Development Area,Hangzhou 310018,China

Singapore

2 Venture Drive #11-30 Vision Exchange Singapore

info@supmea.com
www.supmea.com
Supmea Automation Co.,Ltd.

Preface

Thank you for purchasing this product. Please read this manual carefully before operating and using it correctly to avoid unnecessary losses caused by wrong operation.

Note

- Modification of this manual's contents will not be notified as a result of some factors, such as function upgrading.
- We try our best to guarantee that the manual content is accurate, if you find something wrong or incorrect, please contact us.
- This product is forbidden to use in explosion-proof occasions.

Version

U-SUP-FTM210-EN1

Safety Precautions

For the safe operation of this product, please strictly follow the outlined safety precautions.

About this manual

- Please ensure the instrument operators have a careful reading of this manual.
- Prior to operation, please study this manual in detail to ensure a thorough comprehension of the device's functionality.
- This manual only describes the product's functions. The responsibility as to the device's suitability for any specific purpose lies solely in the operator.

Precautions for product protection, safety, and modification

- For your safety and the normal operation of the product and its controlling systems, the guidelines and precautions specified in this manual are supposed to be fully observed. Operating the instrument in ways not specified in this manual may compromise its protective features. Our company shall not be liable for any malfunctions or accidents resulting from non-compliance with the precautions described.
- When equipped the product and its controlling systems with lightning protection or separate safety protection circuits, it needs to be implemented by other devices.
- If you need to replace components or fittings of the product, please use the model specified by the company.
- This product is not designed for use in systems directly related to personal safety, such as nuclear power facilities, radioactive equipment, railway systems, aviation equipment, marine equipment, and medical equipment. If applied, it is the user's responsibility to implement additional equipment or systems to ensure personal safety.
- Do not modify this product.
- The following safety symbols are used in this manual:



Hazard: Failure to take appropriate precautions may result in serious personal injury, product damage, or major property loss.



Warning: Pay special attention to critical information related to the product or specific sections of this user manual.



- Confirm whether the supply voltage is consistent with the rated voltage before operation.
- Do not use the instrument in a flammable and combustible or steam area.
- To prevent electric shock and operation errors, ensure proper grounding protection is in place.
- Thunder prevention engineering facilities must be well managed: the shared grounding network shall be grounded at the correct electric level, shielded, with wires properly routed, and an SPD surge protector applied as needed.
- Some internal components may carry high voltage. To avoid the risk of electric shock, do not open the front square panel unless it is being handled by trained personnel or maintenance staff authorized by our company.
- To avoid electric shock, disconnect the power before performing any checks.
- Check the condition of the terminal screws regularly. If loose, please tighten them before use.
- Unauthorized disassembly, modification, or repair of the product is not allowed, as it may lead to malfunctions, electric shock, or fire hazards.
- Wipe the product with a dry cotton cloth. Do not use alcohol, benzine, or other organic solvents, and avoid exposing the product to any liquids. If the product falls into the water, please cut off the power immediately to prevent leakage, electric shock, or fire hazards.

- Please check the grounding protection regularly. Do not operate the product if you think that the protection, such as grounding protection and fuses, is inadequate.
- Ventilation holes on the product housing must be kept clear to avoid malfunctions due to high temperatures, abnormal operation, shortened life, and fire.
- Please strictly follow the instructions in this manual; failure to do so may damage the product's protective devices.



- Do not use the instrument if it is found damaged or deformed upon opening the package.
- Prevent dust, wire end, iron fines, or other objects from entering the instrument during installation, as this may cause abnormal operation or failure.
- During operation, to modify the configuration, signal output, startup, stop, and operation safety shall be fully considered. Improper operation may lead to failure and even destruction of the instrument and control equipment.
- Each part of the instrument has a certain service life, which must be maintained and repaired on a regular basis for long-term use.
- If the product comes to the end of its service life, it should be disposed of as industrial waste as a way of environmental protection.
- Disconnect the instrument when it is not in use.
- If you find smoke from the product, smell odor, abnormal noise, etc., please turn off the power switch immediately and contact the company in time.

Disclaimer

- The company does not make any guarantees for the terms outside the scope of this product warranty.
- This company is not responsible for damage to the instrument or loss of parts or unpredictable damage caused directly or indirectly by improper operation of the user.

No.	Name	Qty	Note
1	Miniature Gas Mass Flowmeter	1	
2	2m Signal Cable	1	
3	User Manual	1	
4	Certificate of Conformity	1	

After opening the box, please confirm the package contents before starting the operation.If you find that the model and quantity are incorrect or there is physical damage in appearance, please contact us.

Contents

1 Introduction 1

1.1 Overview 1

1.2 Measuring Principle 1

1.3 Features 2

2 Technical Parameters 3

3 Structure and Dimensions 4

3.1 Structure 4

3.2 Dimensions 5

4 Installation 6

4.1 Installation Tips 6

4.2 Installation Precaution 6

4.3 Pipe Design 7

4.4 Installation ProcedureFlow Direction 9

5 Electrical Connections 10

5.1 Wiring Sequence 10

5.2 Wiring Instruction 10

6 Operation 11

6.1 Dispaly and Operation Units 11

6.2 Menu Description 13

7 Troubleshooting 18

Appendix A Communication Protocol 19

A.1 Physical Interface 19

A.2 Register Address 19

A.3 Communication Example 21

1 Introduction

1.1 Overview

The micro mass flowmeter is an electronic gas mass flow measuring instrument based on a Micro-Electro-Mechanical Systems (MEMS) flow-sensing chip. Designed specifically for industrial applications, the flowmeter integrates multiple anti-interference designs with a highly compatible system architecture. It supports various signal output options and enables network-based management through communication interfaces.

Featuring a compact size, lightweight construction, and high measurement accuracy, the flowmeter offers outstanding performance, ease of installation, and low maintenance requirements, along with excellent stability and reliability. It is widely used in gas measurement and monitoring applications across industries such as medical equipment, oil and gas, chemical processing, and energy.

1.2 Measuring Principle

The micro mass flowmeter operates on the principle of thermal mass flow measurement, which is based on the relationship between heat transfer and gass mass flow. By detecting temperature variations generated upstream and downstream of the sensor, the mass flow rate of the gas can be determined.

The flowmeter integrates both a heat source and temperature sensing elements. When the MEMS chip is in operation, a stable thermal field is established around the sensor. As a certain mass of gas flows through the sensor, the gas flow disturbs this thermal field, creating a specific temperature distribution that depends on the gas mass flow rate and velocity.

The MEMS sensors detect these temperature changes and convert them into electrical signals. A dedicated transmitter circuit then amplifies, conditions, and linearizes the signals. Because gases with different mass flow rates produce different degrees of thermal disturbance around the sensor, the flowmeter can accurately measure the gas mass flow rate or totalized flow.

1.3 Features

- Simplified structure with compact size and lightweight design
- Wide flow range with high accuracy and fast response time
- Linear output with no additional compensation required
- LCD display for clear and intuitive reading; screen supports 180° rotation
- Multiple output options to meet diverse application requirements

2 Technical Parameters

Table 1 Technical parameters

Measured variables	mass flow
Flow range	(1~100) mL/min, (5~500) ml/min, (10~1000) ml/min, (20~2000) ml/min, (0.2~20) L/min, (0.5~50) L/min, (1 ~ 100) L/min , (2~200) L/min
Range ratio	100:1
Accuracy	±2.0%FS
resolution	0.1%FS
Repeatability	1%FS
Response time	≤10ms
Transmitter output	Current output: (4~20) mA or (0~20) mA ; output load ≤650Ω
	Voltage output: (1 ~ 5) V / (0 ~ 5) V / (0.5 ~ 4.5) V; output impedance approximately 1kΩ
Communication	RS485 interface, MODBUS-RTU
Alarm output	NPN alarm output
Power supply	(9~24) VDC Note: When using current output, a 24V DC power supply must be used.
Operating current	≤60mA
Electrical interface	GH1.25-5 Pin
Media type	Air, nitrogen, oxygen, argon, and carbon dioxide
Process pressure	≤1MPa
Temperature	0 ℃~ 50 ℃
Humidity	35%~85% RH (no condensation, no freezing)
Storage temperature	-20℃ ~ 70℃
Protection level	IP40

3 Structure and Dimensions

3.1 Structure

This flowmeter mainly consists of a base, air passage, circuit, housing, buttons, and display module, as shown in the figure below:

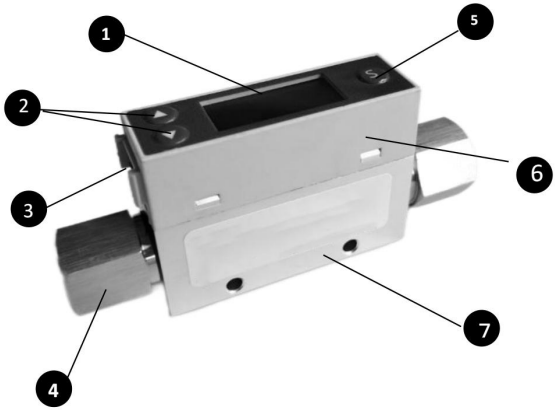

Fig.1 Structural diagram

Table 2

No.	Components	Remark
1	Display screen	
2	Up and down buttons	
3	Electrical interface	GH1.25-5Pin
4	Process connection	JB/T 7056 Φ6/8/10/12mm quick-connect fitting, nickel-plated copper G1/4 or R1/4 thread, 304SS
5	Function buttons	
6	Upper shell	plastic
7	Base	aluminum alloy

3.2 Dimensions

The external dimensions of the miniature gas mass flowmeter are shown in the figure below:

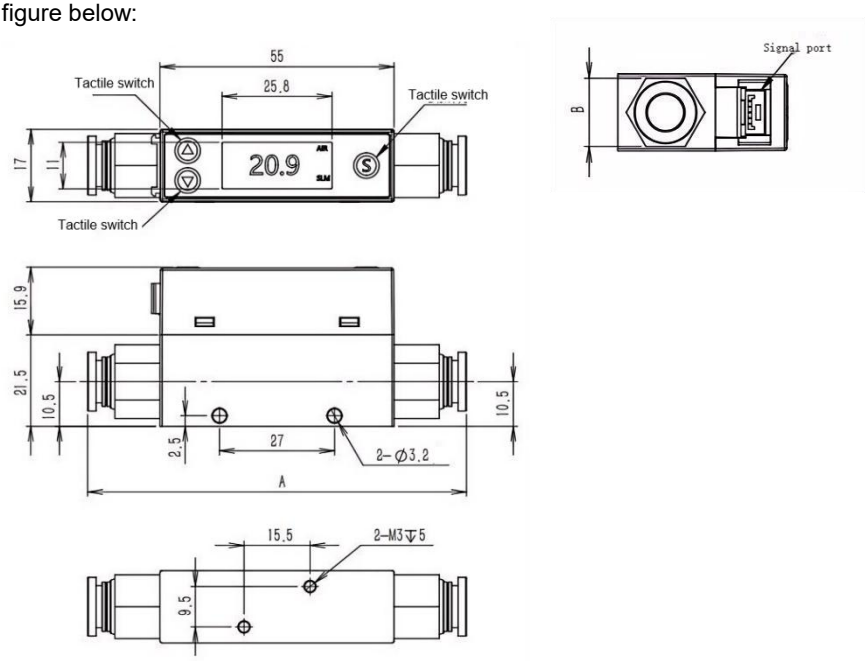

Fig.2 Flowmeter dimensions (unit: mm)

Table 3

Process connection	A (mm)	B (mm)
Φ6 quick connector	84	12
Φ 8 quick connector	87	14
Φ 10 quick connector	97	17
Φ 12 quick connector	104.5	20
G1/4 thread	89	17
R1/4 thread	89	17

4 Installation

4.1 Installation Tips



Note!

Please check whether the boxes are damaged or not, and whether they have been handled roughly or not. Please report the damage to the courier service and the manufacturer.



Note!

Please check the packing list to make sure the batch of goods that you have received is complete.



Note!

Please check the instrument nameplate and confirm whether the delivered contents are consistent with your order. Check whether the power supply indicated on the nameplate is correct. If not
Correct, please contact the manufacturer.



Note!

The installation diagram is for reference only; please refer to the actual product.

4.2 Installation Precaution

- Before installing the flowmeter, all impurities inside the pipeline must be removed to prevent foreign matter from entering and damaging the instrument. The inner wall of the pipeline shall be clean and free of deposits.
- Do not loosen or disassemble any fixed parts of the flowmeter without authorization.
- The protective earth (PE) conductor in the output wiring of the flowmeter must be reliably connected.
- After installation, no mechanical stress shall be applied to the flowmeter to avoid damage to the instrument.
- The flowmeter should not be operated in environments with strong magnetic interference or severe vibration.

- The process gas flow shall remain stable. When operating associated valves, open and close them slowly; sudden opening or closing is strictly prohibited.

4.3 Pipe Design

4.3.1 Piping Considerations

(1) **Location**

① The electromagnetic flowmeter shall be installed in a dry and ventilated place. Places that could be flooded should be avoided.

② The electromagnetic flowmeter shall be kept away from the sunshine and rain. When it is installed outdoors, it shall be equipped with facilities against sunshine and rain.

③ The electromagnetic flowmeter shall not be installed in places with large temperature variations, and avoid high temperature radiation from the equipment. If it must be installed therein, heat insulation and ventilation measures shall be taken.

④ The electromagnetic flowmeter shall not be installed in an environment containing corrosive gases. If it must be installed therein, ventilation and anti-corrosion measures shall be taken.

⑤ The electromagnetic flowmeter shall be installed to avoid as much strong vibration as possible, such as violent pipe vibration. In this case, brackets for fixing pipes on both sides of the electromagnetic flowmeter shall be provided.

(2) Length of inlet and outlet runs

For the measurement accuracy of the flowmeter, it is recommended to ensure that the sensor pipeline is installaed with a straight inlet pipe length of more than 200 mm and a straight outlet pipe length of more than 100 mm.

The straight pipe sections shall be installed concentrically with the sensor, and both the sensor and the straight pipe sections shall be securely fixed.

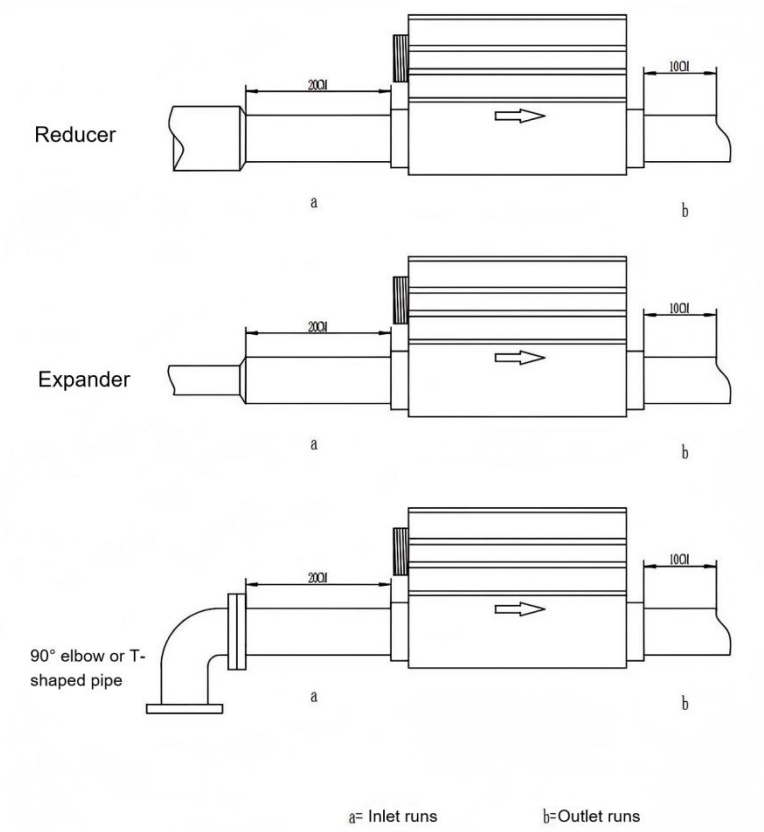

Fig.3 Straight runs requirement

4.3.2 Flow Direction

This product is recommended for horizontal installation. The arrow mark on the base indicates the direction of media flow. The inlet and outlet connections must be correctly installed, and a high-efficiency filter shall be installed at the inlet.

During installation, the flow direction indicated on the flowmeter shall be consistent with the actual gas flow direction. The axis of the flowmeter shall be aligned with the pipeline axis, and the installation position shall comply with the requirements for straight inlet and outlet pipe lengths specified in this manual.

4.4 Installation ProcedureFlow Direction

The installation steps are as follows:

(1) After unpacking the flowmeter, inspect its appearance to ensure that there is no damage.

(2) Clean the pipeline and install the flowmeter in the line.

(3) Connect the power supply cable and verify the power polarity and input voltage range (9–24 VDC).

(4) If signal wiring is required, ensure that the signal cables are correctly connected to the corresponding devices.

(5) Power on the unit and confirm that the display operates normally.

(6) Slowly open the upstream and downstream valves and verify that the flow reading is normal.

5 Electrical Connections

5.1 Wiring Sequence

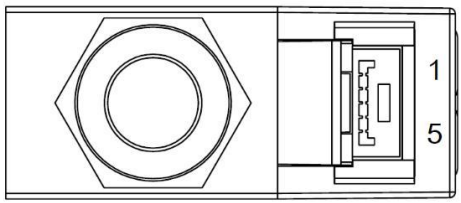

Fig.4

Table 4 Line color definition

No.	Color	Definition
1	blue	GND
2	grey	Analog current/Analog voltage/NPN
3	white	RS485 B/NPN
4	black	RS485 A/NPN
5	brown	24VDC

5.2 Wiring Instruction

Table 5 Wiring description

No.	Color	Mode 1	Mode 2	Mode 3	Mode 4	Mode 5
1	blue	GND	GND	GND	GND	GND
2	grey	NPN	Simulated current	Simulated current	Analog voltage	Analog voltage
3	white	RS485 B	RS485 B	NPN2	RS485 B	NPN2
4	black	RS485 A	RS485 A	NPN1	RS485 A	NPN1
5	brown	24VDC	24VDC	24VDC	24VDC	24VDC

Note: The above configurations represent combined output modes. Any single output can also be used independently.

6 Operation

6.1 Dispaly and Operation Units

6.1.1 Main Interface

After the flowmeter is powered on, it displays the instantaneous flow rate interface by default. The buttons Ⓢ can be used to switch between instantaneous flow rate and totalized flow rate.

Instantaneous flow interface: Totalized flow interface:

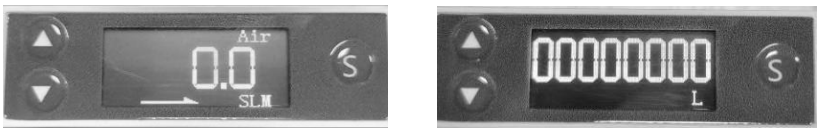

Fig.5 Main interface

6.1.2 Display Flip Function (Up/Down)

▲: OLED display flip function button

▼: OLED display flip function button

On the instantaneous flow and totalized flow display pages, briefly pressing the Up or Down button allows the display to be flipped vertically (up/down).

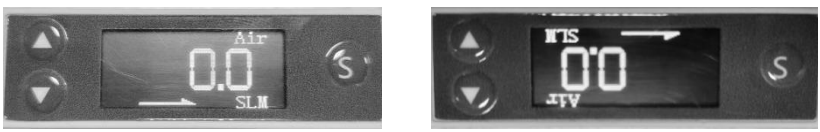

Fig.6 Display Flip Page

6.1.3 Totalized Flow Display

Description of totalized flow display:

- For a measuring range of 50 – 2000 mL:
  No decimal places are displayed.
  When the totalized flow is less than 99,999,999 mL, the unit is displayed as mL.
  When the totalized flow exceeds 99,999,999 mL, the unit automatically switches to L.
- For a measuring range of 5 – 10 L:
  Two decimal places are displayed.

When the totalized flow is less than 99,999.99 L, the unit is displayed as L.
When the totalized flow exceeds 99,999.99 L, the unit automatically switches to m^3.

- For a measuring range of 20 – 200 L:
  One decimal place is displayed.
  When the totalized flow is less than 999,999.9 L, the unit is displayed as L.
  When the totalized flow exceeds 999,999.9 L, the unit automatically switches to m^3.
- For a measuring range of 300 – 1000 L:
  No decimal places are displayed.
  When the totalized flow is less than 99,999,999 L, the unit is displayed as L.
  When the totalized flow exceeds 99,999,999 L, the unit automatically switches to m^3.

6.1.4 Button Functions

Table 6

Symbol	Button Functions	Description
	Selection/ confirmation	●On the main screen, briefly press to switch between instantaneous flow and totalized flow display. ●On the main screen, press and hold for more than 3 s to enter the menu list. ●In the menu interface, enter the selected submenu. ●In setting mode, confirm the modification.
	Up	●On the main screen, a short press to flip the display vertically (up/down). ●In the menu interface, short press to select the menu items. ●In the settings menu, modify the relevant values .
	Down	●On the main screen, a short press will flip the display vertically (up/down) ●In the menu interface, short press to select the menu items. ●In the settings mode, modify the relevant values.

6.2 Menu Description

Table 7

Display	Description	Operating Instructions	Note
F--1	Modify device address	Press the button Ⓢ to display the current address. Use ▲/▼ buttons to change the value; press the button Ⓢ to confirm. "YES" indicates saving, "No" cancels.	Address range 1~253
F--2	Modify baud rate	Press the Ⓢ button to display the current baud rate . Use the ▲/▼ button to select; press the button Ⓢ to confirm, "YES" indicates saving, "No" cancels.	Supported baud rates : 9600/19200/38400/57600
F--3	Clear totalized flow	Press the button Ⓢ to display CLR; press the ▲/▼ button to switch up and down; press the button Ⓢ to confirm. "YES" to clear the totalized flow ; displaying "No" to cancel saving.	
F--4	Zero point calibration	Press the button Ⓢ to display "SET"; press the ▲/▼ buttons to switch up and down; press the button Ⓢ to confirm. "YES"	Displays "Err" if calibration exceeds threshold

Display	Description	Operating Instructions	Note
		to perform zero-point calibration; "No" to cancel saving.	
F--5	Modify lower limit alarm	Press the button S to display current lower alarm value. Use the button ▼ to adjust the digit of lower limit alarm. The button ▲ allows to adjust the value of selected digit (0~9, cycles, the button ▲ increase the digit). Press button S to confirm. "YES" saves, and "No" cancels.	Default: 20% of full scale. Displays "Err" if value exceeds threshold
F--6	Modify upper limit alarm	Press the button S to display current upper alarm value. Use the button ▼ to adjust the digit of upper limit alarm. The button ▲ allows to adjust the value of selected digit (0~9, cycles, the button ▲ increase the digit). Press button S to confirm. "YES" saves, and "No" cancels.	Default range is 80%. If the set value exceeds the threshold, Err will be displayed.
F--7	Modify the 1st output mode	Press the button S to display current logic (Normal/Reverse). Use ▲/▼ buttons to switch. Press button S to confirm.	1-P: Positive logic output 1-N: Negative logic output

Display	Description	Operating Instructions	Note
		"YES" saves, and "No" cancels.	
F--8	Modify 2nd output mode	Press the button S to display current logic (Normal/Reverse). Use ▲/▼ buttons to switch. Press button S to confirm. "YES" saves, and "No" cancels.	2-P: Positive logic output 2-N: Negative logic output Default: 2-P
F--9	Set decimal places	Press the button S to display the current output forward/reverse logic . Press the ▲/▼ button to toggle up and down. Press the button S to confirm; "YES" indicates saving, "No" cancels.	0: no decimals 0.0: one decimal place 0.00: two decimal places
F-10	Set gas coefficient function	Press the button S to display the gas type corresponding to the gas coefficient; press the buttons ▲/▼ to switch up and down; press the button S to confirm. "YES" saves, and "No" cancels.	The gas types include N_2 , O_2 , CO_2 , and Ar. AIR
F-11	Custom gas coefficient	Press the up arrow button S to display the current gas coefficient value ; press the button ▼ to adjust the digit of	The gas type is N2 . Displays 1.000

Display	Description	Operating Instructions	Note
		the coefficient setting; press the button ▲ to adjust the value of the selected digit. The data will cycle from 0 to 9 (the selected position can only be increased using the up arrow button). After setting the coefficient, press the button S to confirm; "YES" indicates saving, "No" cancels.	
F-12	Filtering time setting	Press the button S to display the current filter time setting ; press the ▲/▼button to switch up or down; press the button S to confirm. "YES" indicates saving, "No" cancels.	There are 5 time settings: 1 to 0.5 seconds . 2---1.0s 3---1.5s 4---2.0s 5---2.5s
F- 13	NPN output delay setting	Press the button S to display the current NPN delay time; press the ▲/▼button to switch up and down; press the button S to confirm, "YES" indicates saving, "No" cancels.	Delay time is 0.1---0.1s 0.5---0.5s 1.0---1.0s 1.5---1.5s 2.0---2.0s
F- 14	Analog range setting	Press the button S to display the current analog measurement range value; Press the button ▼to adjust the	Displays "Err" if value exceeds threshold

Display	Description	Operating Instructions	Note
		set range position; press the button ▲ to adjust the value of the selected position. Press the button S to confirm; "YES" indicates saving, "No" cancels.	
F-15	Start flow setting	Press the button S to display the current start flow as a percentage of full scale. Use ▲ / ▼ buttons to adjust the percentage. After adjustment, press the button S shows "No"; use ▲ / ▼ to switch between "YES" or "No", then press the button to confirm. Use S to select "QUIT" and press the button S again to exit.	Range: 0~10%. Note: smaller value may cause zero reading instability
QUIT	ESC	Press the button S to exit settings.	

7 Troubleshooting

Table 8 Troubleshooting and solution

Issues	Possible causes	Solutions
No display on the instrument panel	Wiring error	Check whether the wirings are connected correctly ccording to the instructions.
	Display screen malfunction	Check whether the display screen are in good contact.
Instantaneous flow rate is displayed as 0	Valve not closed tightly	Ensure the valve is completely closed.
	Pipe leak	Inspect the pipeline for leaks and repair if necessary.
No data recorded	Sensor damage	Check the sensor for error indicators or faults.
	No airflow in the pipe	No airflow
Flow records decreased	Filter blockage	Inspect the filter screen and clean or replace if clogged.
	Sensor contaminated	Clean or replace the sensor
Communication is abnormal	Wiring error	Connect the wires correctly according to the instructions.
	Incorrect communication baud rate setting	Correctly set the instrument baud rate
	Converter malfunction	Confirm that the converter is functioning properly.
No transmitter output	Wiring error	Verify that all transmitter connections are correct and secure.

Appendix A Communication Protocol

A.1 Physical Interface

The electromagnetic flowmeter has a standard RS485 communication interface and adopts the Modbus-RTU standard protocol, which can collect parameters such as instantaneous flow rate, instantaneous flow velocity, and cumulative flow.

Serial communication parameters: Default baud rate 9600bps, 8 data bits, 1 stop bit, no parity.

A.2 Register Address

Table 9 Register address

Address (Hex)	Name	Data types	RW	Description
0x0000	Device address	Unsigned 16-bit integer	R/W	Range 1~253
0x0003	Gas type	Unsigned 16 -bit integer	OR	1: He 2: CO 4: Ar 7: H_2 8: Air 13: N_2 15:O_2 25: CO_2 28: CH_4
0x0004	Full scale	Unsigned 16 -bit integer	OR	Full-scale flow rate; unit same as flow rate unit
0x0005	Flow unit	Unsigned 16 -bit	OR	10: SCCM (cm^3/min)

Address (Hex)	Name	Data types	RW	Description
		integer		100: SLM (L/min)
0x0015	Temperature 16 -bit	Signed 16 -bit integer	OR	The unit is ℃ , and the gotton value needs to be divided by 10
0x0016	Flow high 16 Bits	Unsigned 32 -bit integer	OR	Instantaneous flow rate value, obtained
0x0017	Flow low 16 Bits	Significant digits: 0.01		The value needs to be divided by 100 .
0x0018	Totalized flow high 32 bits	Unsigned 64 -bit integer	R/W	The totalized flow value needs to be divided by 1000 .
0x0019				
0x001A	totalized flow low 32 bits	Unsigned 64 -bit integer	R/W	
0x001B				
0x001C	totalized flow unit	Unsigned 16 -bit integer	OR	0: L; 1: m³
0x001D	totalized flow days	Unsigned 16 -bit integer	OR	Days of totalized flow
0x001E	totalized flow hours	Unsigned 16 -bit integer	OR	Hours of totalized flow
0x001F	totalized flow minutes	Unsigned 16 -bit integer	OR	Minutes of totalized flow
0x0020	totalized flow seconds	Unsigned 16 -bit integer	OR	Seconds of totalized flow

A.3 Communication Example

Example 1: **Host reads basic information**

Host sends: 0x01 0x03 0x00 0x03 0x00 0x03 0 xF 5 0 xCB

Slave device returned: 0x01 0x03 0x06 0x00 0x0D 0x00 0x64 0x00 0x0A 0 xCD 0x6C

Returned data parsing: 0x01: Device address

0x03: Function code

0x06: Number of data bytes

0x000D: Gas type, converted to decimal is 13, i.e. N_2 .

0x 0064: Full scale, equivalent to 100 in decimal.

0x 000A: Flow rate unit, which is 10 in decimal, i.e., SCCM.

0x CD6C: CRC checksum

Example 2: Host read flow

Host sends: 0x01 0x03 0x00 0x16 0x00 0x02 0x25 0 xCF

Slave device returned: 0x01 0x03 0x04 0x00 0x00 0x30 0x34 0 xEF 0 xE 4

Returned data parsing: 0x01: Device address

0x03: Function code

0x04: Number of data bytes

0x00003034: Instantaneous flow rate, converted to decimal is 12340, divided by the fixed value of 100, to get the actual flow rate = 12340/100 = 123.4 (if the flow rate unit is SCCM, then the flow rate is 123.4 SCCM; if the flow rate unit is SLM, then the flow rate is 123.4 SLM).

0x EFE4 : CRC checksum