Recorder Flow Pressure Temp Analyzer Level

Datasheet

Coriolis Mass Flowmeter

SUP-FCC800

Supmea

Committed to process automation solutions

Tel: 86-15868103947

E-mail: info@supmea.com

www.supmea.com

Datasheet

Coriolis Mass Flowmeter
SUP-FCC800

The Coriolis Mass Flow Meter is an advanced flow measurement instrument developed based on the Coriolis force principle. It directly measures the mass flow, density, and temperature of fluids in closed pipelines. This meter is widely used in industries such as chemical processing, petroleum, food and beverage, pharmaceuticals, and paper manufacturing.

Features

- Direct measurement of fluid mass flow.
- Wide measurement range and high accuracy.
- Low installation requirements, no need for upstream or downstream straight pipe sections.
- Integrated design with compact structure, easy to install; compact version available for limited installation spaces.
- Suitable not only for standard fluid measurement but also for challenging industrial media, such as high-viscosity fluids, slurries, and suspensions, which are difficult to measure with other flow meters.
- Capable of real-time measurement of density, temperature, and other parameters of the medium.
- Reliable operation with a low maintenance rate — no obstructions or moving parts inside the pipeline, resulting in fewer failure factors and easy maintenance.
- Adjustable damping time.
- Equipped with a powerful self-diagnostic function for convenient troubleshooting.

Product name

Principle

The Coriolis Mass Flow Meter operates on the Coriolis principle, in which the measuring tube vibrates as the medium flows through it. The sensors detect and analyze changes in the tube’s frequency, phase difference, and amplitude, enabling direct measurement of the medium’s mass flow rate. The fluid density is calculated from the vibration frequency. In addition, the meter can simultaneously measure multiple process variables, such as volumetric flow rate and temperature.

Parameters			
Performance Parameters			
Measured Variables	Mass Flow, Density, Temperature		
Nominal Diameter	U-shape: DN3~DN150 Micro-bent Type: DN8~DN100 Straight Tube Type: DN8~DN50 Triangular Type: DN1~DN2		
Turn-down Ratio	U-shape: 10:1 Micro-bent Type: 10：1 Straight Tube Type: 5：1 Triangular Type: 10：1		
Flow Rate Range	Nominal Diameter	Maximum Flow Rate	
		kg/min	Lb/min
	DN1	0.2	0.44
	DN2	1.6	3.53
	DN3	3	6.61
	DN4	5	11
	DN8	20	44
	DN15	60	132
	DN20	100	220
	DN25	200	440
	DN40	450	992
	DN50	650	1433
	DN80	2000	4409
	DN100	3000	6613
	DN150	12000	26455
Density Measurement Range	（0.5~2.0）g/cm^3		
Temperature Measurement Range	（-240~350）℃		

Accuracy	Flow Rate: 0.15 Class, 0.2 Class, 0.5 Class Density: ±0.001g/cm^3（±1kg/m^3） Temperature: ±1° C or ±0.5% of reading, whichever is greater
Repeatability	Within ½ of the accuracy
Output	
Transmitter Output	（4～20）mA，Load Resistance≤750Ω
Communication Output	RS485 Interface, MODBUS Communication Protocol; Hart
Pulse Output	Duty Cycle: 10%~90% Pulse Frequency: Maximum 10,000 Hz Active Output: Output current 10 mA, open-circuit voltage 30 V
Power Supply	
Power Supply Input	24VDC/220VAC
Power Consumption	≤10W
Electrical Interface	M20*1.5
Process Conditions	
Measuring Medium	Gases, liquids, slurries, suspensions, etc.
Medium Temperature	Standard Type: Integrated: (-50~80)°C Remote: (-50~150)°C Cryogenic Type: (-200~150)°C (U-shape and remote type only) Ultra-Low Temperature Type: (-255~150)°C (remote type only) High Temperature Type: (-50~230)°C (remote type only) Ultra-High Temperature Type: (-50~350)°C (remote type only)
Nominal Pressure	Clamp Connection: PN16 Flange Connection: PN16, PN40, or PN63
Environmental Conditions	
Ambient Temperature	（-40~55）℃（with Display : -25℃～55℃）
Storage Temperature	（-40~70）℃
Humidity	≤95%
Protection Rating	IP67

Wiring

RS485 Output Wiring

The RS485 interface is used to connect the flow meter to a computer serial port for communication and commissioning with upper-level software. The default baud rate is 38,400 bit/s.

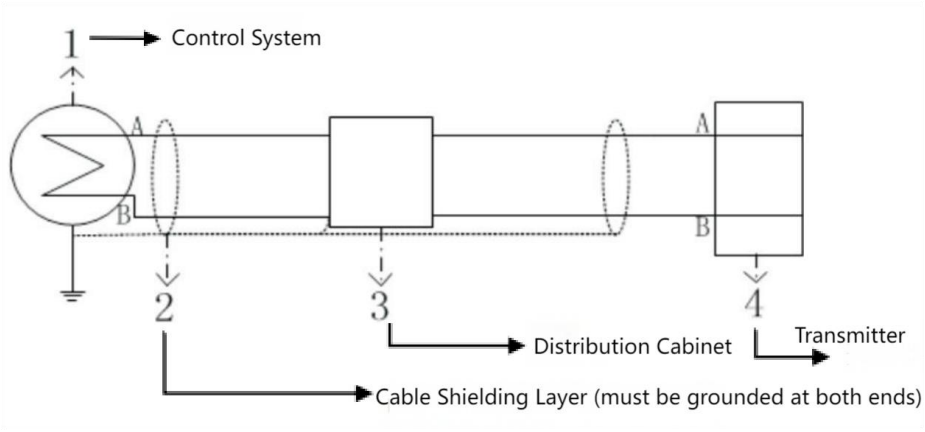

Figure 1 RS485 Wiring Diagram

Pulse Signal Output Wiring

The Pulse interface is used for pulse signal output connection. The default pulse signal is active, 5 VDC; it can be configured as passive (open collector) with a maximum rating of 30 VDC, 100 mA.

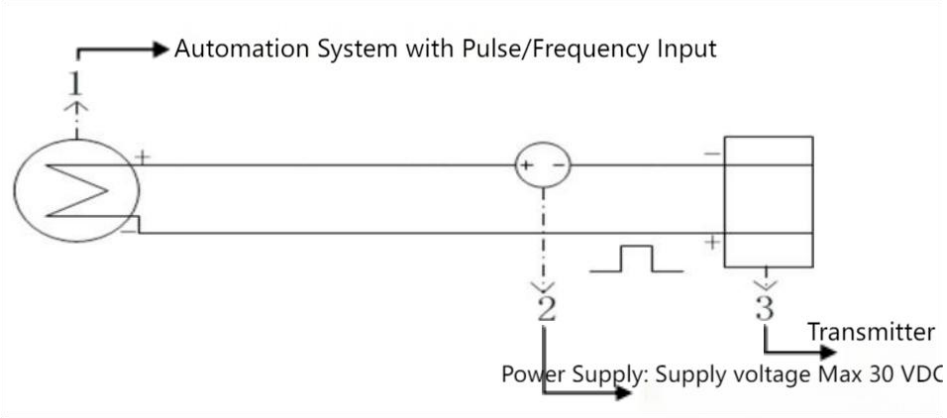

Figure 2 Pulse Signal Output Wiring Diagram

(4–20) mA / HART Output Wiring

The Cloop interface is used for (4–20) mA current loop or HART output signal connection.

Power Supply Voltage: (12–28) VDC

Current Range: 4–20 mA

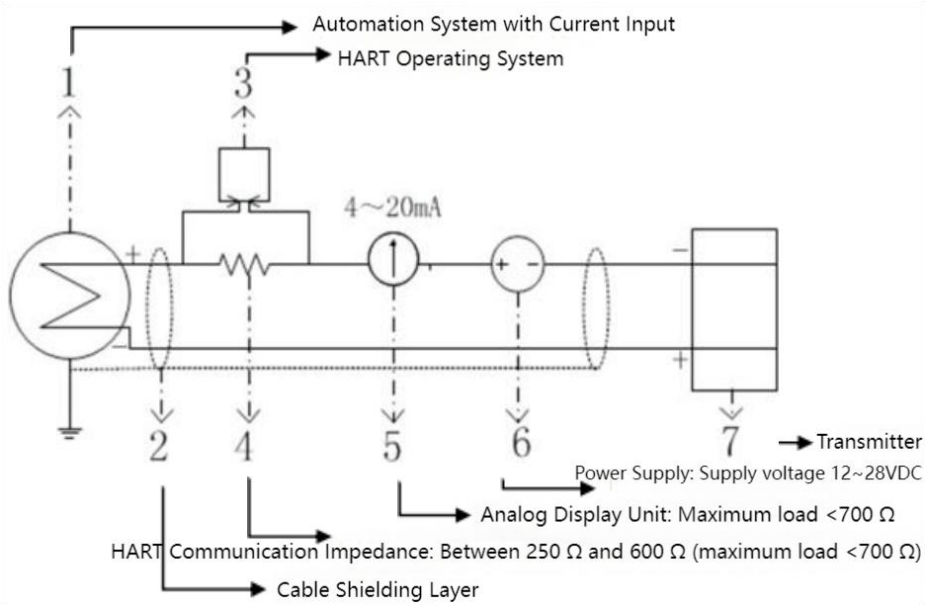

Figure 3 (4–20) mA / HART Output Wiring Diagram

Dimension

U-Shaped Coriolis Mass Flow Meter

DN3–DN25 U-Shaped Flow Meter

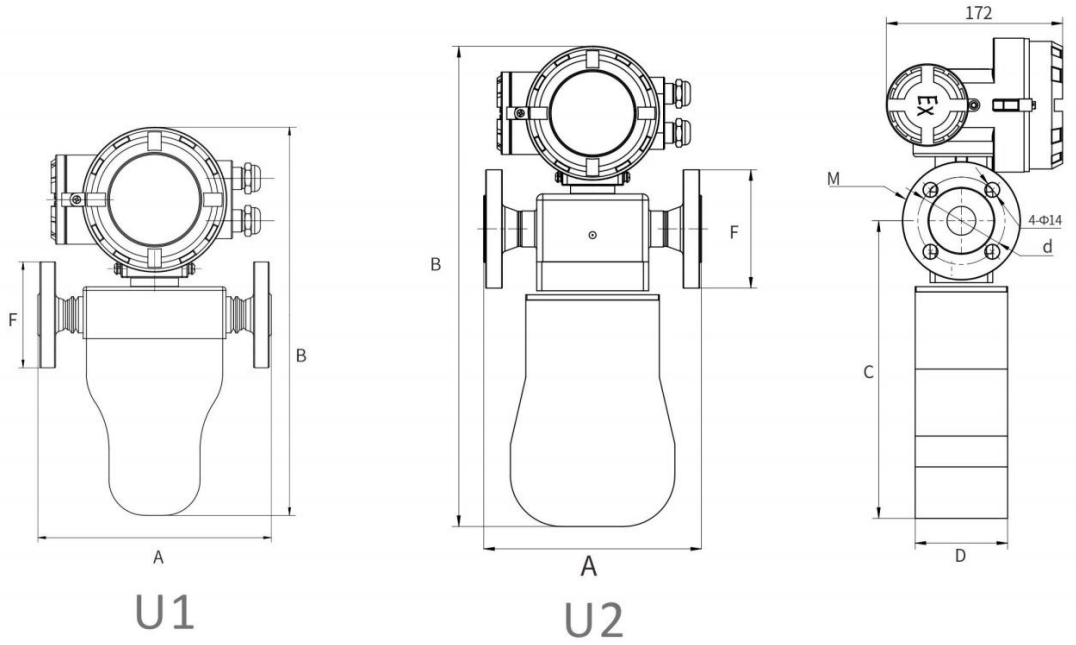

Figure 4 Outline Diagram of DN3–DN25 U-Shaped Flow Meter

Table 1 Dimensions of DN3–DN25 Wide U-Shaped Coriolis Mass Flow Meter (Unit: mm)

Type	Nominal Diameter	A	B	F	C	D	d
U1	DN3	210	325	95	156.50	54	φ65
	DN4	210	325	95	156.50	54	Φ65
	DN8	210	325	95	156.50	54	Φ65
	DN15	210	348	95	180	54	Φ65
U2	DN20	212	458	115	289	90	Φ85
	DN25	212	458	115	289	90	Φ85

DN40~DN150 U-Shaped Flow Meter

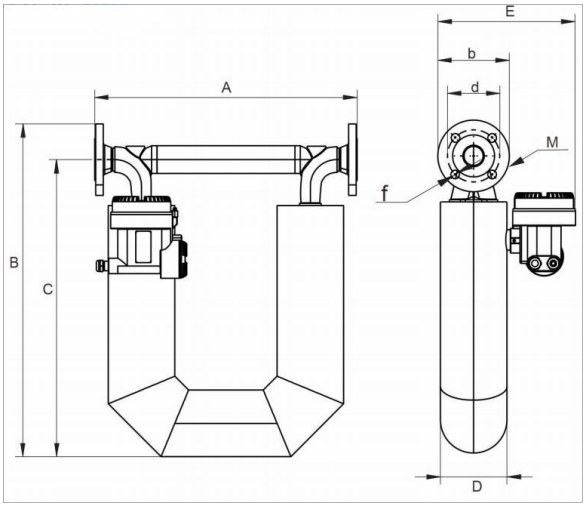

Figure 5 Outline Diagram of DN40~DN150 U-Shaped Flow Meter

Table 2 Dimensions of DN40~DN150 Wide U-Shaped Coriolis Mass Flow Meter (Unit: mm)

Nominal Diameter	A	B	C	D	E	M	d	b
DN40	552	699	624	140	288	4-Φ18	Φ110	Φ150
DN50	600	747	665	159	305	4-Φ16	Φ125	Φ165
DN80	763	950	850	219	353	8-Φ18	Φ160	Φ200
DN100	963	1079	962	273	416	8-Φ22	Φ190	Φ235
DN150	1164	1144	994	324	467	8-Φ26	Φ250	Φ300

Micro-Bend Coriolis Mass Flow Meter

Table 3 Specifications of Micro-Bend Coriolis Mass Flow Meter

Sensor Type	Nominal Diameter	Maximum Working Pressure of Measuring Tube	Maximum Flow Rate	
			kg/min	Lb/min
Micro-Bend	DN8	≤10MPa	20	44
	DN15		60	132
	DN25		200	440
	DN40		450	992
	DN50		650	1433
	DN80	≤6.3MPa	2000	4409
	DN100	≤4MPa	3000	6613

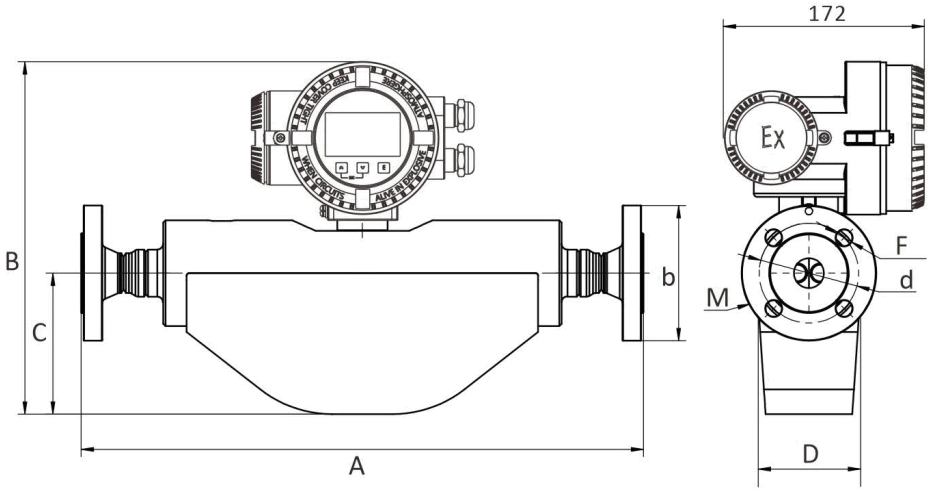

Figure 6 Outline Diagram of Micro-Bend Coriolis Mass Flow Meter

Table 4 Dimensions of Micro-Bend Flow Meter (Unit: mm)

Nominal Diameter	A	B	C	D	F	d	b
DN8	390	270	100	70	4-Φ14	Φ65	Φ95
DN15	390	270	100	70	4-Φ14	Φ65	Φ95
DN25	480	300	120	90	4-Φ14	Φ85	Φ115
DN40	816	401	200	125	4-Φ18	Φ110	Φ150
DN50	816	401	200	125	4-Φ16	Φ125	Φ165
DN80	954	567	300	170	8-Φ18	Φ160	Φ200
DN100	1111	552	292	292	8-Φ22	Φ190	Φ235

Straight-Tube Coriolis Mass Flow Meter

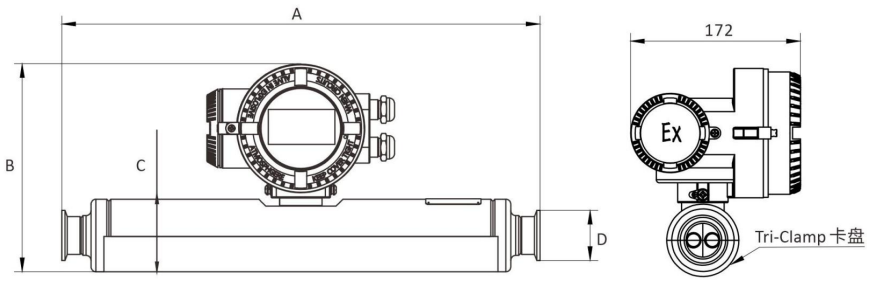

Figure 7 Outline Diagram of Straight-Tube Coriolis Mass Flow Meter

Table 5 Dimensions of Straight-Tube Flow Meter (Unit: mm)

Nominal Diameter	A	B	φC	φD
DN8	382	207	73	50.5
DN15	382	207	73	50.5
DN25	483	209	73	50.5
DN40	750	260	125	91
DN50	750	260	125	91

Inverted Triangle Coriolis Mass Flow Meter

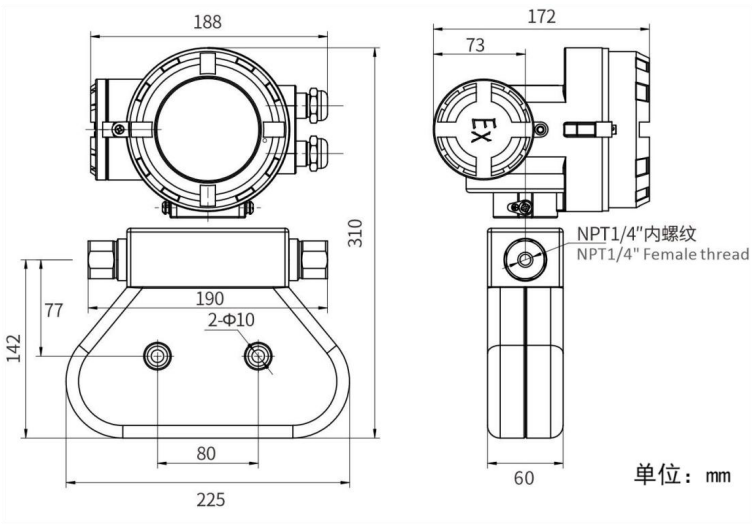

Figure 8 Dimensional Drawing of Inverted Triangle Coriolis Mass Flow Meter

Cryogenic Coriolis Mass Flow Meter

DN8 Cryogenic Coriolis Mass Flow Meter

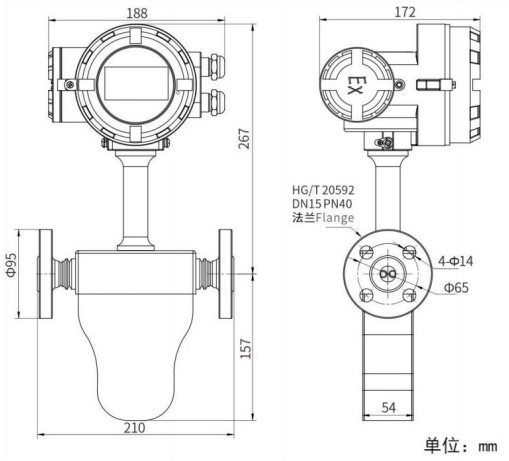

Figure 9 Dimensional Drawing of DN8 Cryogenic Coriolis Mass Flow Meter

DN40 ~ DN80 Cryogenic Coriolis Mass Flow Meter

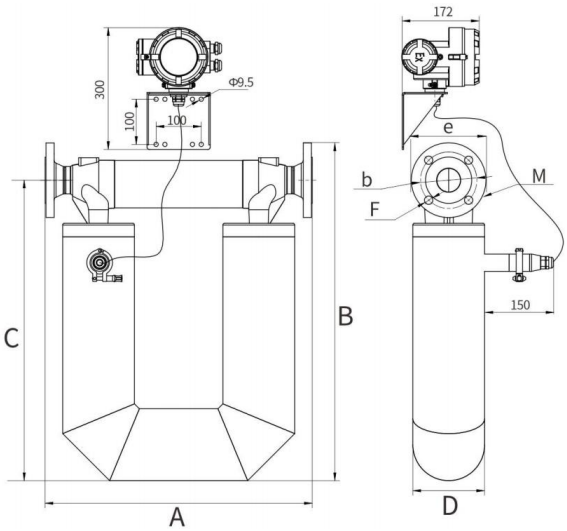

Figure 10 Outline Dimensions of DN40–DN80 Cryogenic Coriolis Mass Flow Meter

Table 6 Dimensions of DN40–DN80 Cryogenic Flow Meter (Unit: mm)

Nominal Diameter	A	B	C	D	e	b	F
DN40	560	699	624	Φ140	Φ150	Φ110	4-Φ18
DN50	592	747	665	中 159	Φ165	Φ125	4-Φ18
DN80	763	950	850	Φ219	Φ200	Φ160	8-Φ18

Ordering code

SUP-FCC800 -U-01-H-C-M3-M1-M1-K-CG-DA-00													Description
SUP-FCC800	-	-	-	-	-	-	-	-	-	-	-	-	
Sensor Type	U												U-shape
	T												Micro-bent Type
	Z												Straight Tube Type
	V												Triangular Type
Nominal Diameter		01											DN1（1/25"）
		02											DN2（2/25"）
		03											DN3（3/25"）
		04											DN4(1/16")
		08											DN8(1/4")
		15											DN15(1/2")
		20											DN20(3/4")
		25											DN25(1")
		40											DN40(1.5")
		50											DN50(2")
		80											DN80(3")
		1C											DN100(4")
		1G											DN150(6")
		XX											Others
Process Connection Standard			H										HG/T 20592 Flange
			T										HG/T 20615 Flange
			F										GB/T 9115 Flange
			C										ASME B16.5 Flange
			S										JIS B2220 Flange
			I										ISO2852 Clamp
			U										NPT Thread (National Pipe Thread)
			X										Others
Nominal Pressure				C									PN16
				D									PN25
				E									PN40
				F									PN63
				G									Class 150
				H									Class 300
				L									Class 600
				M									Class 900
				J									JIS 10K
				K									JIS 20K

	P								JIS 40K
	Q								JIS 63K
	X								Others
Measuring Tube Material		M3							316LSS
		MG							Hastelloy C
		XX							Others
Process Connection and Body Material			M1						304SS
			M3						316LSS
			MG						Hastelloy C
			XX						Others
Sensor Material				M1					304SS
				M3					316LSS
Accuracy					K				0.5 Class
					F				0.2 Class
					W				0.15 Class
					X				Others
Output and Power Supply						CG			Pulse+RS485，24VDC
						AM			4-20mA+Pulse+RS485，24VDC
						AN			4-20mA+HART+Pulse+RS485，24VDC
						CH			Profibus PA+RS485，24VDC
						CJ			Pulse+RS485，24VDC/220VAC Dual Power Supply
						BK			4-20mA+Pulse+RS485，24VDC/220VAC Dual Power Supply
						CK			4-20mA+HART+Pulse+RS485，24VDC/220VAC Dual Power Supply
						CL			Profibus PA+RS485，24VDC/220VAC Dual Power Supply
Heat Resistance Temperature							FA		-50-80℃
							FB		-50-150℃
							FC		-200-150℃
							FD		-255-150℃
							FE		-50-230℃
							FF		-50-350℃
							XX		Others
Electrical Interface, Housing Material, and Protection Rating								DA	Integrated Type, M20×1.5 Cable

			Gland,304SS,IP67
	DB		Remote Type, M20×1.5 Cable Gland,304SS,IP67
	XX		Others
Remote Cable Length		00	0m
		03	3m